Facit 4031
optical tape reader 120 ch/s

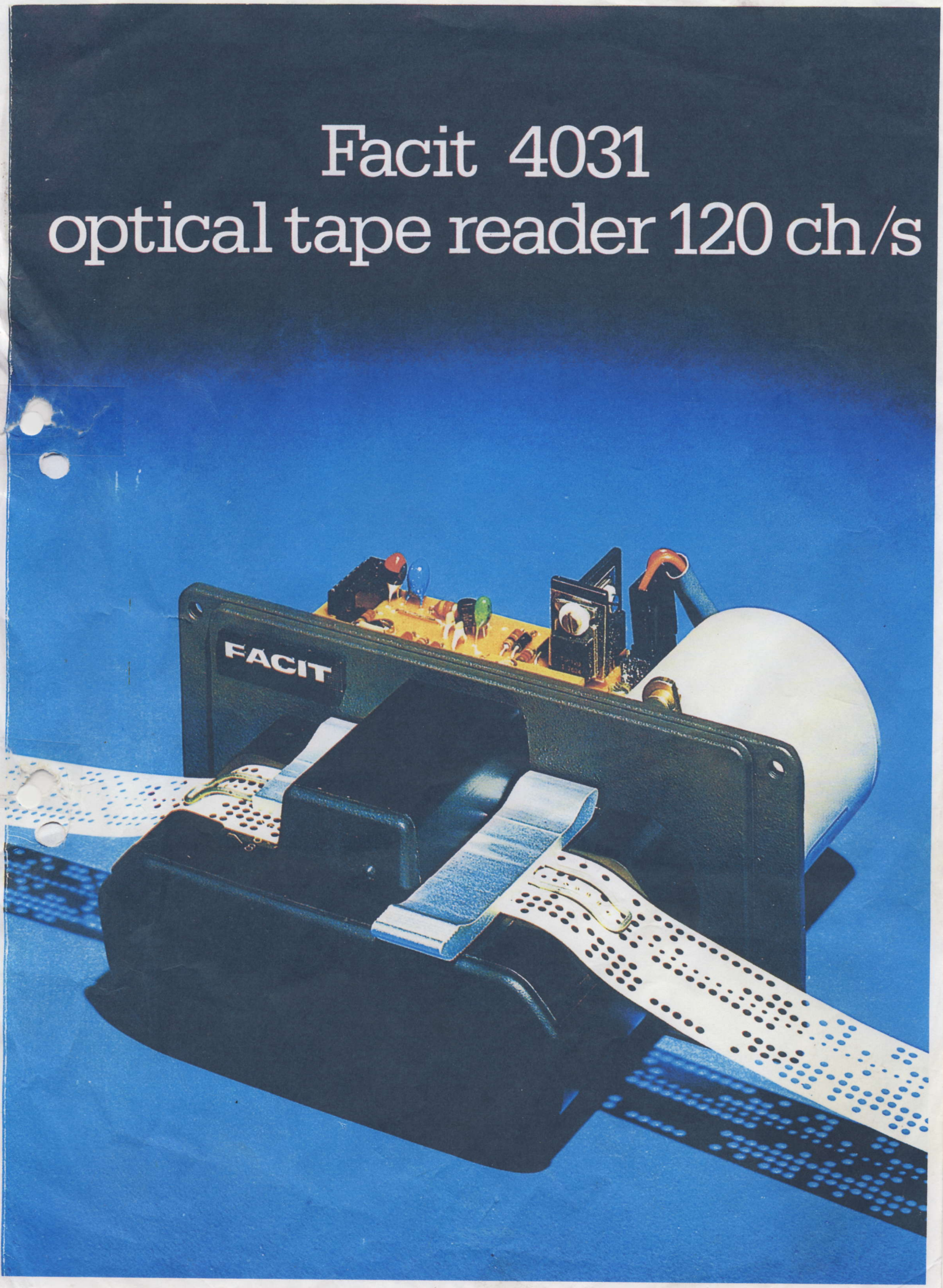

Facit "Micro"

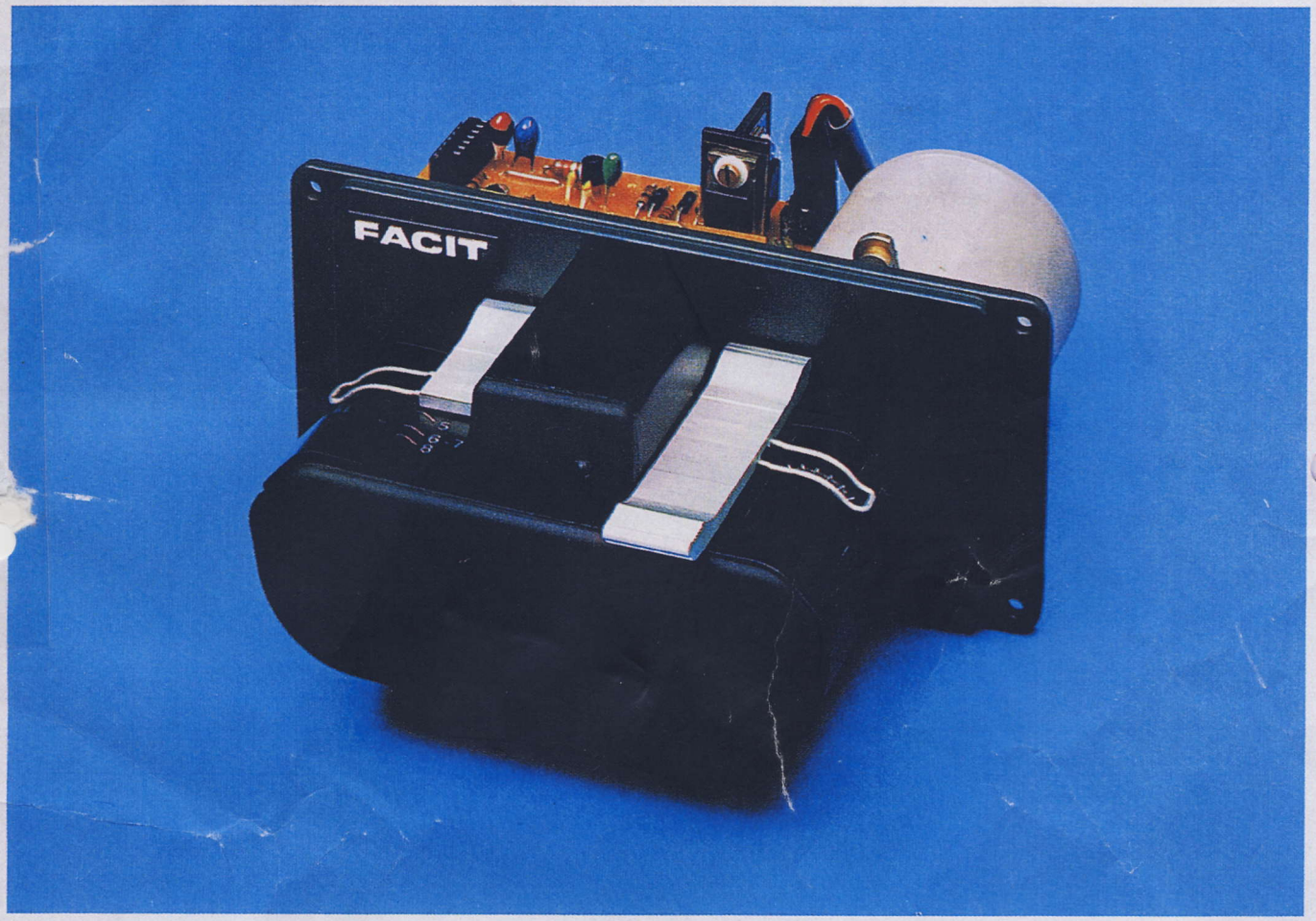

A small reader with major advantages!

The Facit 4031 Optical Tape Reader is a robust reader compact in design with properties which are attractive for most applications. These properties have primarily been optimized for micro-computer system and terminal applications. The reader has only one moving part. This and light source/phototransistor array means high reliability and long service life.
A reader based on Facit's long and well-known expertise in the punch tape product sector.

- Reading speed 0 — 120 ch/s asynchronous
- Bidirectional
- Stepping motor with sprocket feed
- Convertible between 5,6/7 and 8 channel tapes
- Reads all tapes with up to 60 % transmissivity
- Optical end of tape indication
- Low power consumption due to pulsed drive of the stepping motor
- Fits into 2-module 19 inch panel height
- The tape is automatically secured when the cover is being closed. Result, easy loading.
- Stepping motor can be disconnected electronically, e.g. in conjunction with fast winding and simultaneous reading.

Design

The construction of the Facit 4031 is extremely robust which contributes to its high reliability. It contains very few movable parts which increases reliability while making service operations extremely simple. Tape feed is carried out by a stepping motor and sprocket wheel.

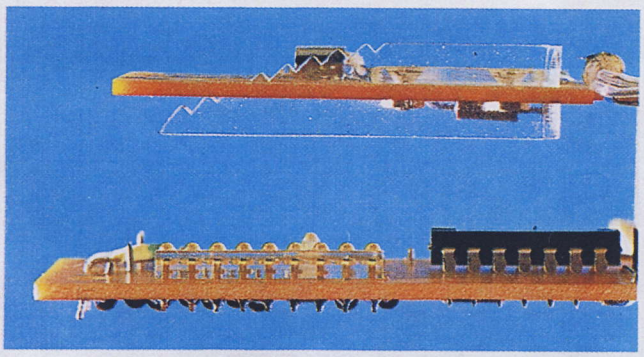

The control electronics are located on one printed assembly board which contains the read head with its light source/phototransistor array, connector for the stepping motor and connectors for input and output signals to the reader.

An extra lamp and photo transistor senses end of tape approximately 20 mm prior to reaching the read head when reading in the forward direction.

The tape track contains masking apertures for each channel which are protected by glass thereby preventing dust from entering the read head.

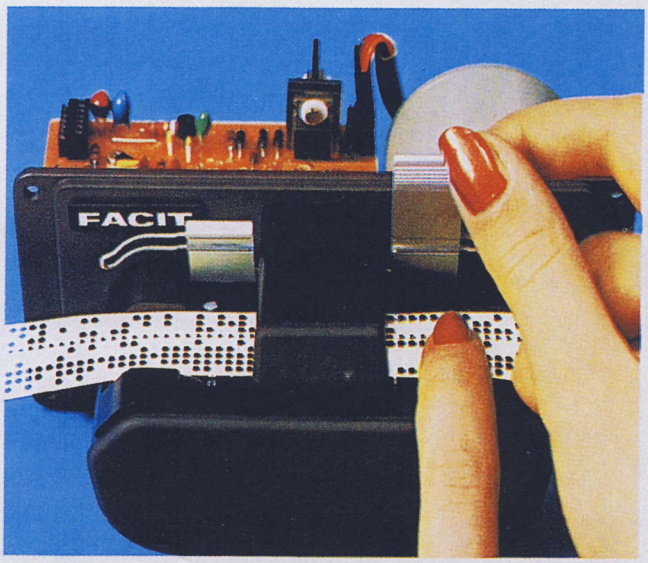

Loading is facilitated by a tape retainer which holds the tape in position during closing of flap. The tape retainer is released when the flap is completely closed so that the tape runs freely during normal operation.

When delivered the reader is adjusted so that reading is carried out while the tape is stationary, i.e. between two feed operations. By turning the stepper motor 7 1/2 degrees reading takes place during tape movement.

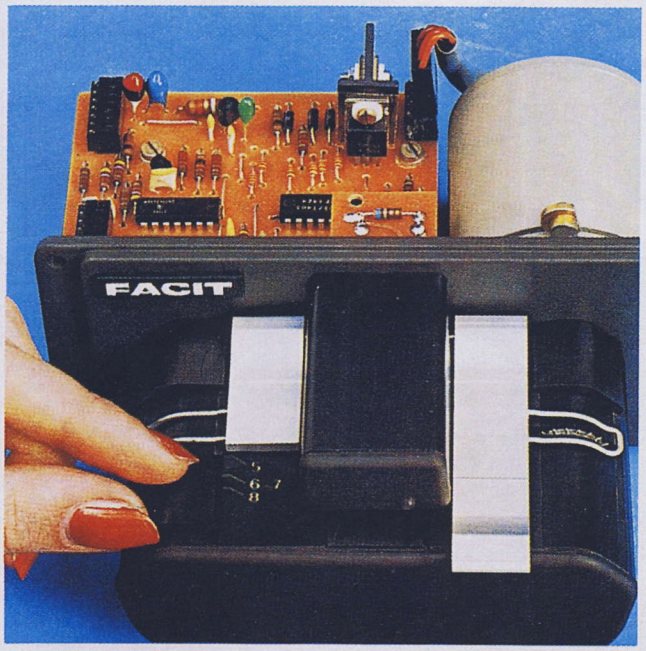

The Facit 4031 can very easily be converted for 5, 6/7 and 8 channel tapes.

The movable tape guide can be locked in desired position by means of an inside screw.

The Facit 4031 is also available mounted in a 19" rack panel, 88.4 mm (3 1/2") high. Model Facit 4030 which is a complete reader, contains Facit 4031, 19" panel power supply and interface electronics. Various interfaces are available.

Panel height of Facit 4030 is 88.4 mm (3 1/2").

With fan-fold bins Facit 4019 the panel height is 176.8 mm (7").

General data

Reading speed	0 — 120 ch/s bidirectional
Reading method	Optical
Tape feed	Stepping motor and sprocket
Tape widths	5 track 17.5 ± 0.1 mm (11/6″) 6 and 7 track 22.2 ± 0.1 mm (7/8″) 8 track 25.4 ± 0.1 mm (1″)
Inter character spacing	As per ISO standard 2.54 mm ± 0.5 % accumulative over 50 rows 2.54 mm ± 3 % between adjacent rows
Thickness of tape	Max 0.25 mm including splice
Tape material	All types with transmissivity of up to 60 %
Temperature	Operation + 5 to + 55°C Storage −10 to + 70°C
Relative humidity	20 to 85 %

Dimensions and weight	Facit 4031 mm	Facit 4031 in	Facit 4031 in Rack mm	Facit 4031 in Rack in	Facit 4030	Facit 4030
Height	68	2.68	88.4	3.68	88.4	3.68
Width	150	5.90	483	19	483	19
Depth beh. panel	80	3.15	80	3.15	150	5.90
Depth in fr. of panel	67	2.64	67	2.64	67	2.64
Weight kg (lb)	1.1	(2.4)	1.8	(3.9)	3.1	(6.8)

Electrical data

All input/output signals are TTL compatible

Input signal definition Facit 4031	Logical 1 + 2.4 to + 5.3 V Logical 0 0 to + 0.4 v at 1.6 mA
Stepping direction (SD)	Forward = logical 1 or open Backward = logical 0
Read instruction (RI)	Logical 0 Pulse width 25-100 µs
Motor release (MR)	Logical 1
Output signal definition Facit 4031	Logical 1 + 2.7 V to + 5.3 V at 400 µA Logical 0 0 V to + 0.4 V at 4 mA
Data channels 1 – 8 feedhole and EOT	Hole and EOT = Logical 1 No hole = Logical 0
Voltage requirements Facit 4031	+ 24 V ± 5 V 400 mA 800 mA peak, duty cycle 50 % + 5 V ± 0.25 V max 300 mA
Input power Facit 4030	100, 115, 220, 240 V ± 10% 49 - 61 Hz Max power 30 W

Block diagram

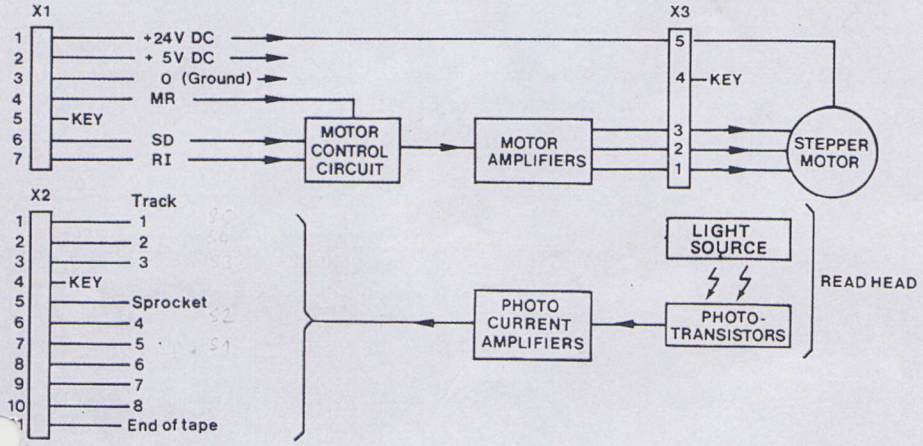

Mating cable connectors
X1: Male AMP 163690-5
X2: Male AMP 163690-9
Pins AMP 163691-1

Timing diagram

- Stepping direction pulse SD must overlap RI by a min 2us before and after
- Reading mode Alt 1: Reading of data with stationary tape
- Reading mode Alt 2: Reading during tape movement

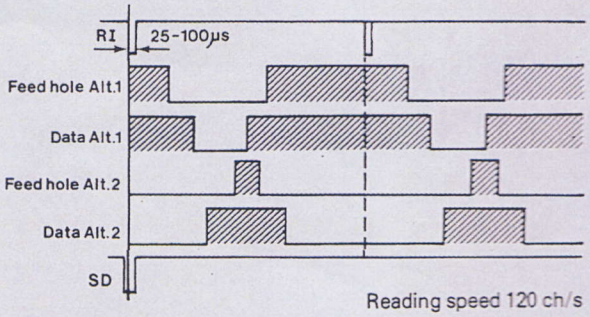

Reading speed 120 ch/s

FACIT
DATA PRODUCTS DIVISION

1103 86 03-10

AUSTRALIA EAI-Electronics Associates Pty. Ltd., P.O.Box 170, Crows Nest 2065 - AUSTRIA Facit-Addo Verkaufsges.m.b.H., Anschützgasse 31, 1150 Vienna - BELGIUM Facit-Addo S.A., Bettegemlaan 7, 1730 Zellik - BRAZIL Facit S.A., Caixa Postal 30114, 01327 Sao Paulo - CANADA Dometic Canada Ltd., Facit Divisions, P.O.Box 212, Oakville - DENMARK Facit A/S, Lundtoftevej 160, 2800 Lyngby - GREAT BRITAIN Facit-Addo Ltd., Maidstone Road, Rochester - FINLAND OY Facit-Addo AB, P.B. 15, 00101 Helsinki - FRANCE Facit Addo S.A., 308, rue du Prés. S. Allende, 92700 Colombes - HOLLAND Facit Data Products, Postbus 7971, Amsterdam-Buitenveldert - ITALY Facit Data Products S.p.A., Via Pallia 9, 20139 Milano - JAPAN Lindeteves-Jacoberg N.V., I.P.O. Box 5165, Tokyo 100-31 - NORWAY Facit A/S, Postboks 1732, Vika, Oslo - SOUTH AFRICA Garlicks Office Machines, P.O.Box 1057, Johannesburg 2000 - SPAIN Facit Division, Electrolux S.A., Box 627, Madrid - SWEDEN Facit AB, 105 45 Stockholm - SWITZERLAND Facit-Addo AG, Seftigenstrasse 57, 3000 Bern - TAIWAN Syscom, Computer Engineering Co., P.O.Box 48-130, Taipei - USA Facit-Addo Inc., 66 Field Point Road, Greenwich, CONN. 06830 - WEST GERMANY Facit GmbH, Postfach 3008, 4000 Düsseldorf - NEW ZEALAND W & K McLean Ltd., P.O.Box 3097, Auckland

Eng 1.77 Printed in Sweden Kolare & Kolare

Facit 4031, changes from serial No. 722-0075

General data

Reading speed	0 — 120 ch/s bidirectional
Reading method	Optical
Tape feed	Stepping motor and sprocket
Tape widths	5 track 17.5 ± 0.1 mm (11/6″) 6 and 7 track 22.2 ± 0.1 mm (7/8″) 8 track 25.4 ± 0.1 mm (1″)
Inter character spacing	As per ISO standard 2.54 mm ± 0.5 % accumulative over 50 rows 2.54 mm ± 3 % between adjacent rows
Thickness of tape	Max 0.25 mm including splice
Tape material	All types with transmissivity of up to 60 %
Temperature	Operation + 5 to + 55°C Storage — 10 to + 70°C
Relative humidity	20 to 85 %

Dimensions and weight	Facit 4031 mm	Facit 4031 in	Facit 4031 in Rack mm	Facit 4031 in Rack in	Facit 4030	Facit 4030
Height	68	2.68	88.4	3.68	88.4	3.68
Width	150	5.90	483	19	483	19
Depth beh. panel	80	3.15	80	3.15	150	5.90
Depth in fr. of panel	67	2.64	67	2.64	67	2.64
Weight kg (lb)	1.1	(2.4)	1.8	(3.9)	3.1	(6.8)

Electrical data

All input/output signals are TTL compatible

Input signal definition Facit 4031	Logical 1 + 2.4 to + 5.3 V Logical 0 0 to + 0.4 v at 1.6 mA
Stepping direction (SD)	Forward = logical 1 or open Backward = logical 0
Read instruction (RI)	Logical 0 Pulse width 25-100 µs
Motor release (MR)	Logical 1
Output signal definition Facit 4031	Logical 1 + 2.7 V to + 5.3 V at 400 µA Logical 0 0 V to + 0.4 V at 4 mA
Data channels 1 – 8 and EOT	Hole and EOT = Logical 1 No hole = Logical 0
Strobe	Logical 1 Pulse width 100-150 µs
Voltage requirements Facit 4031	+ 24 V ± 5 V 400 mA 800 mA peak, duty cycle 50% + 5 V ± 0.25 V max 300 mA
Input power Facit 4030	100, 115, 220, 240 V ± 10% 49 - 61 Hz Max power 30 W

Block diagram

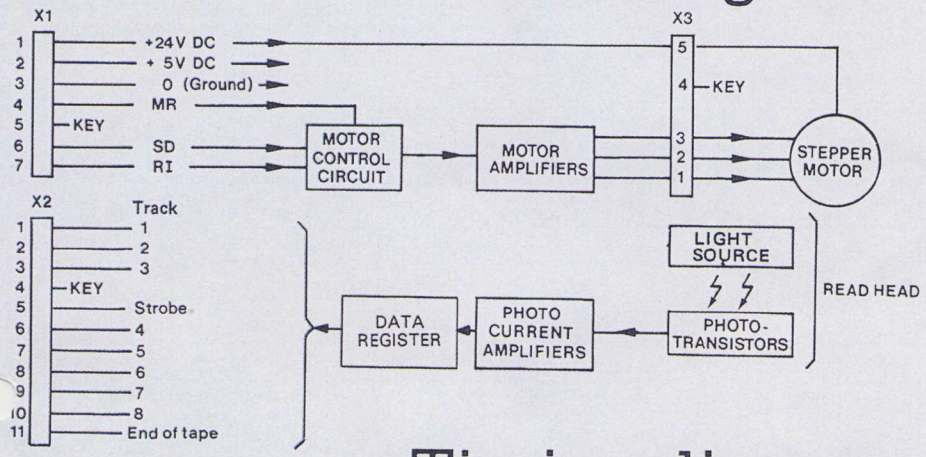

Mating cable connectors
X1: Male AMP 163690-5
X2: Male AMP 163690-9
Pins AMP 163691-1

Timing diagram

○ Stepping direction pulse SD must overlap RI by a min 2 µs before and after

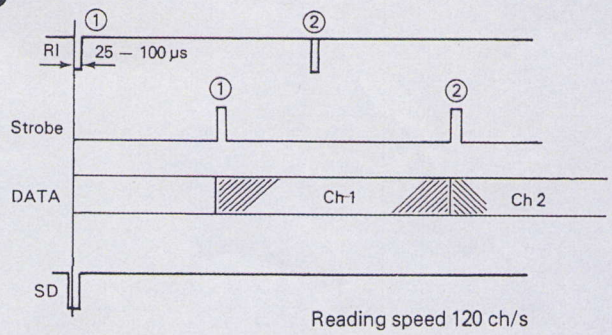

Reading speed 120 ch/s

FACIT DATA PRODUCTS

AUSTRALIA EAI-Electronics Associates Pty. Ltd., P.O.Box 170, Crows Nest 2065 - AUSTRIA Facit-Addo Verkaufsges.m.b.H., Maria Hilferstrasse 51, 1060 Vienna - BELGIUM Facit-Addo S.A., 30 Rue Bois des Iles, B-1080 Brussels - Brazil Facit S.A., Caixa Postal 30114, 01327 Sao Paulo - CANADA Dometic Canada Ltd., Facit Divisions, P.O.Box 212, Oakville - DENMARK Facit A/S, Lundtoftevej 160, 2800 Lyngby - GREAT BRITAIN Facit-Addo Ltd., Maidstone Road, Rochester - FINLAND OY Facit-Addo AB, P.B. 15, 00101 Helsinki - FRANCE Facit Addo S.A., 308, rue du Prés. S. Allende, 92700 Colombes - HOLLAND Facit Data Products, Postbus 7971, Amsterdam-Buitenveldert - ITALY Facit Data Products S.p.A., Via Pallia 9, 20139 Milano - JAPAN Lindeteves-Jacoberg N.V., I.P.O. Box 5165, Tokyo 100-31 - NORWAY Facit A/S, Postboks 1732, Vika, Oslo - SOUTH AFRICA Garlicks Office Machines, P.O.Box 1057, Johannesburg 2000 - SPAIN Facit Division, Electrolux S.A., Méndez Alvaro 20, Madrid - SWEDEN Facit AB, 105 45 Stockholm - SWITZERLAND Facit-Addo AG, Seftigenstrasse 57, 3000 Bern - TAIWAN Syscom, Computer Engineering Co., P.O.Box 48-130, Taipei - USA Facit-Addo Inc., 66 Field Point Road, Greenwich CONN. 06830 - WEST GERMANY Facit GmbH, Postfach 3008, 4000 Düsseldorf - NEW ZEALAND W & K McLean Ltd., P.O.Box 3097, AUCKLAND

1103 86 03-20 Eng 6.77 Printed in Sweden Kolare & Kolare

D8, D9 = MC14175

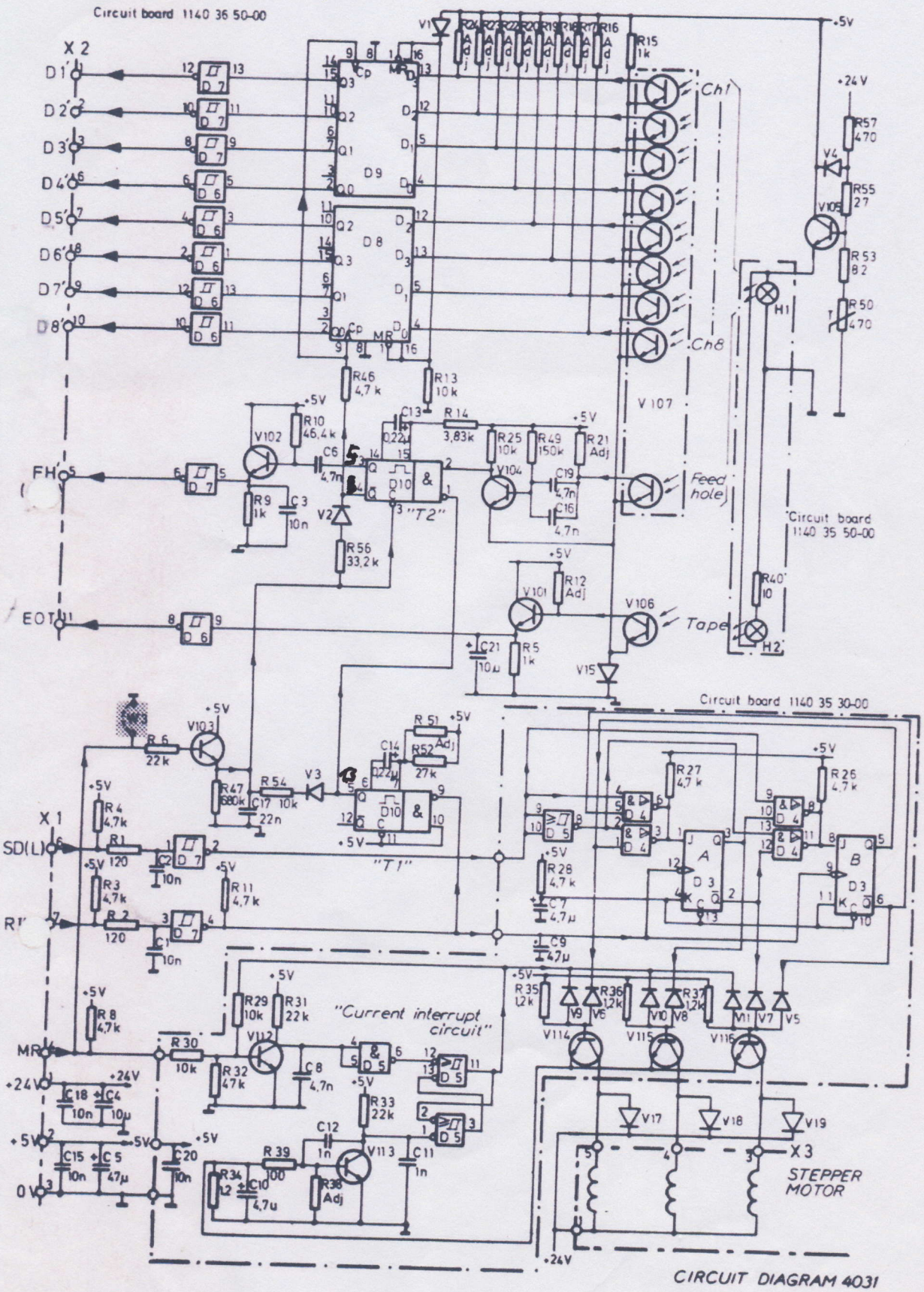

CIRCUIT DIAGRAM 4031

2.6.6. Character format

Independent of signal standards, RS-232-C or CURRENT LOOP, the following set-ups are needed. See Fig. 8.

Strapped pos	designation
J	word length
K	word length
L	parity ON
M	ODD parity
V	1 stop-bit
(No V	2 stop-bits)

word bits	strap
5	J & K
6	J
7	K
8	-

FIG 8

2.6.7 Baud rate

Set-ups needed for reading. See Fig. 9

Strapped pos	designation
U & T	4800 bps
U & N	2400 "
U & O	1200 "
U & P	600 "
U & R	300 "
U & S	150 "
Q	110 "
U & Q	75 "

FIG 9

3 POWER SUPPLY

The power supply can be used on 100-115-220 or 240V AC +/- 10%, 49-61Hz.
There are two full-wave rectifiers, see Fig. 10, one for +5V and the other for +24V. +5V is regulated +/- 0.2 at 0.5A.
NOTE the fuse values for different input voltages.

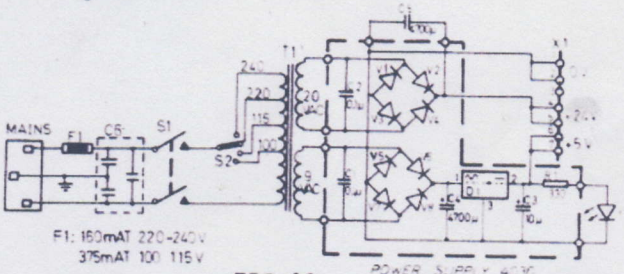

FIG 10

POWER SUPPLY 40W
Circuit diagram

4 READER

4.1 GENERAL
See Fig. 11.

The reader works normally with a "handshake" operation. The acceptor transmits signal RI via the interface to the reader. This signal will result in a strobe FH [illegible]

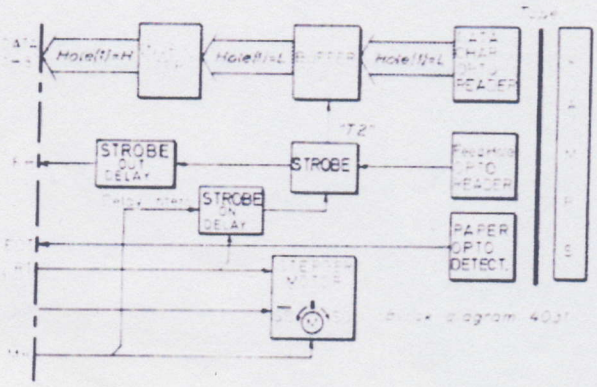

FIG 11

On command by RI the stepper motor shall feed one character space of the tape. The opto readers shall read data 1-8, feed hole and the existence of paper. All are fed to the acceptor via the interface as signals Data 1-8, FH(strobe) and EOT. In this way miss-alignements and oscillations at pulse start are eliminated.

The motor must have condition SD in order to perform forward or backward feeding.
Open circuit=forward feeding.
When used together with the servo spooler 4013 the stepper motor may be released.

4.2 READING
See Fig. 11& APP. 6.

RI triggers the stepper motor FF:s and T1 FF. When the delay, caused by T1, has passed the change from paper to feed hole will trigger T2 FF. See Fig. 12.

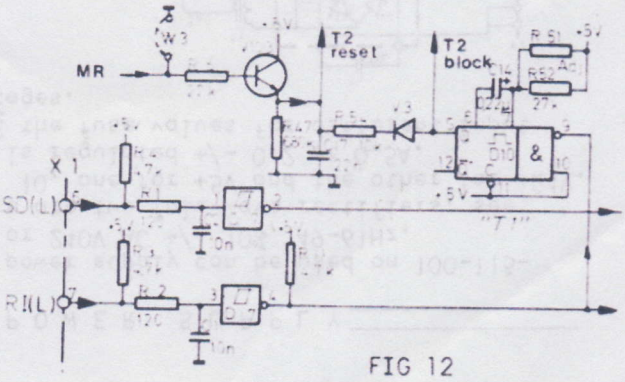

FIG 12

T2 FF gives a clock pulse to the data buffer to write data from the tape and have it accessable on the output data lines (see Fig. 13) when the strobe pulse, FH', also made by T2, is transmitted.

U & S	150 "
Q	110 "
U & Q	75 "

FIG 9

3 POWER SUPPLY

The power supply can be used on 100-115-220 or 240V AC +/- 10%, 49-61Hz.
There are two full-wave rectifiers, see Fig. 10, one for +5V and the other for +24V. +5V is regulated +/- 0.2 at 0.5A.
NOTE the fuse values for different input voltages.

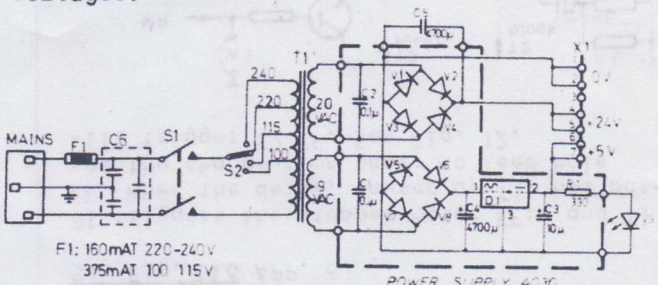

FIG 10

4 READER

4.1 GENERAL

See Fig. 11.

The reader works normally with a "handshake" operation. The acceptor transmits signal RI via the interface to the reader. This signal will result in a strobe, FH, back to the ac-

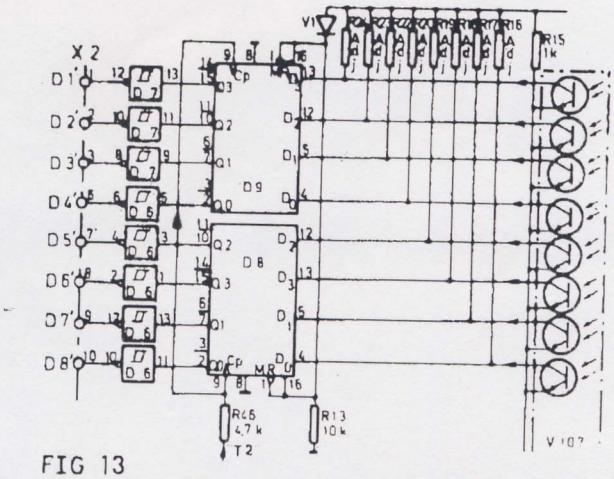

FIG 13

If there is no feed hole within ≈12ms, T2 FF is kept reset and a new RI is needed. See Fig. 14.

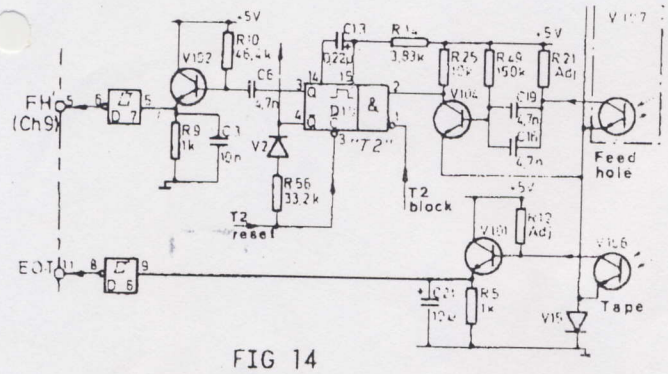

FIG 14

This reset function may be inhibited by MR during high speed reading. Here reading can be achieved by using the feed hole for strobe pulse set up.

The paper opto detector signals EOT when there is no paper. The detector is placed approx. 20mm ahead of the reading station, forward feeding direction.

You get a copy with correct logical content that is easier and safer for the data acceptor to treat instead of an electrical copy of the tape content with alignment errors or start/stop pulses oscillation.

4.2.1 Explanation of reading
See Fig. 15 & APP. 6.

The trailing edge of RI(L) triggers A, B and T1 FF's. During the time when T1=1, C17 is charged and T2 FF is kept blocked. When the delay (≈3.5ms) has passed the signal from the feed hole may trigger T2. Only the change from paper to hole causes the signal, because the signal is derivated by C16//C19 R49 (≈1.4ms).

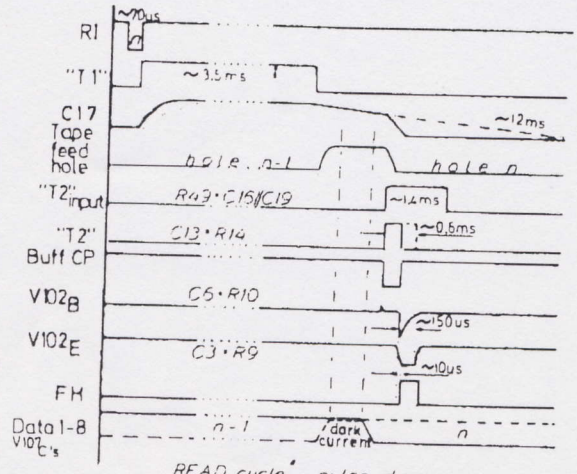

FIG 15

During the time until T2 is 1-set, C17 is discharged through R47, time constant approx. 12ms, but when T2=1 the time constant is changed because R56 becomes involved in the discharge.

The T2 pulse is derivated by C6·R10 (≈150µs) and the pulse from the trailing edge cuts off V102. The pulse out, FH', is delayed another 5-20µs by C3·R9.

When W3 is not used and MR becomes high the function of C17 is inhibited and pulse time for T2 is decided solely by C13·R14.

4.2.2 Stepper motor

V114 - 116 are driving the stepper motor. They are controlled by D3 FF's or are blocked by MR. See Fig. 16.

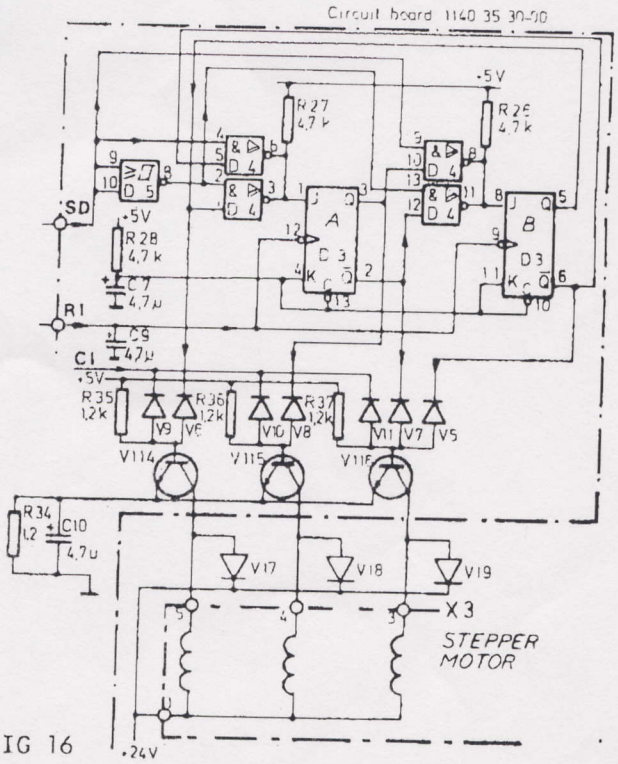

FIG 16

D3 is JK FF's clocked by RI(L) and controlled by SD and the state of the FF's. When input J becomes high, the output changes its state. SD(L) determines the stepping direction.

In all these cases the op. amp:s are operated on the inverted input and the tape is driven by the sprocket wheel. When high speed is wanted the tape will be driven by one of the servo motors, left or right.

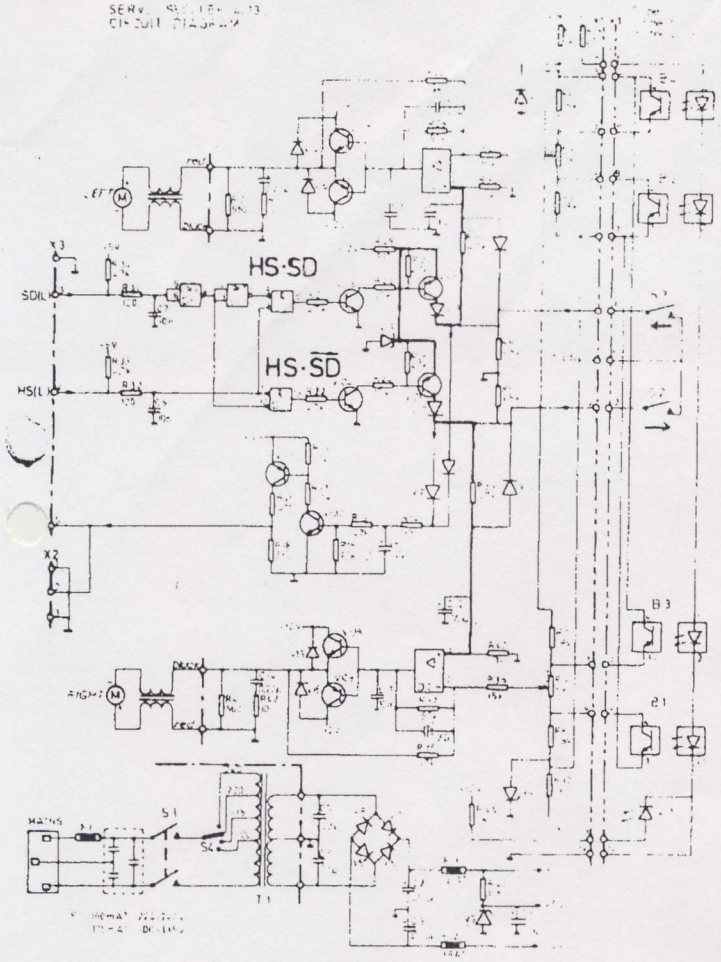

FIG 20

This operation is controlled by either the panel switches S3/S2 or by signal HS(L) and the state of SD(L).

The difference between these two is that by using HS(L), a lower voltage (8.2V) is applied to + input of the op.amp. A zener diode V19, lowers the voltage. With +12V the shield can move deeper into the opto coupler before the op.amp. reacts and cuts off the motor current. The motor itself works only with +12V or -12V. With +8.2V the op.amp. reacts earlier and the speed will not be so high.

The reason for this is to allow the opto reader circuits to be restored between each character.

Any of these two combinations gives signal MR which releases the stepper motor sprocket wheel.

When high speed is operated by S3/S2 the lower guide wheel on the wind off side is prevented to pass to its lowest position. Thus its lever will come in dark current state for B3/B4 and this will stretch the tape on the wind off side. At the same time the motor on the other side will start to wind on. After this, the normal servo function starts.

NOTE On start the lower guide wheel in the tape feed direction should not be in its lowest position. If so, only the wind off side will work when the sprocket wheel starts feeding.

4.3.4 _ 4019 _

A passive device for bidirectional feeding of fanfolded tape.

5 INTERFACES

5.1 GENERAL

The different interfaces shall adapt the tape reader output to different data acceptors. The data output to the acceptor may be in parallel form (SP1 & Universal), or in serial form (V24 or Current Loop). The interfaces also handle different control signals.

5.2 SP1 - INTERFACES

See Fig. 21 & APP. 2

The main parts are the buffer, the parity checker, error circuits and delay circuits.

FF's; position and logic 1 output. A=D3:13, B=D3:5, C=D2:13, D=D7:9, E=D7:5, F=D10:3.

Signal SC is transmitted to the acceptor when data are available. Signal SO=1 is also transmitted, telling that SC information is valid (no error condition on hand).

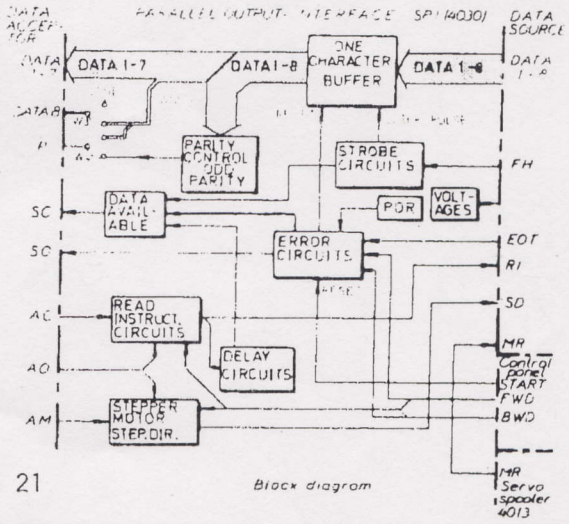

FIG 21 Block diagram

The acceptor transmits three signals: AO, AC & AM. AO stands for operable and is used by the interface to ascertain that AC and AM are valid. AM sets D and is transferred to 4031 as SD(L). AM=0 means forward stepping and AM=1 means backward stepping. SO=0 means ERROR and SO=1 means no error.

The acceptor accepts data after controlling that SC=1. It acknowledges data by changing AC from 1 to 0. This change, C2 and the collector resistance of D5:11 see to that only one short pulse is sent to C. In order to trigger C once more, AC has to be changed from 0 to 1 and once again from 1 to 0.

See Fig. 22

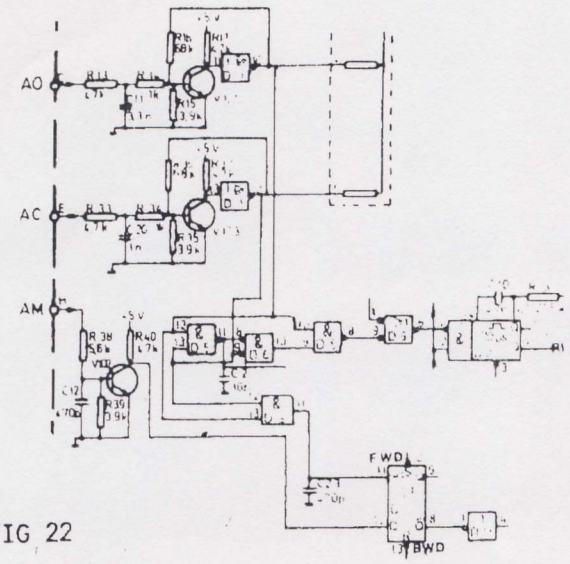

FIG 22

C gives RI(L) to 4031, where it triggers the FF's for the stepper motor which performs one step in the decided direction. On the interface, signal RI(L) triggers the two FF's A & B. As long as one of them is 1-set, signal SC is inhibited. They are delay FF's where A, approx. 3ms, blocks the accept of FH and B, approx 5ms, furthermore delays the transmission of SC. See Fig. 23.

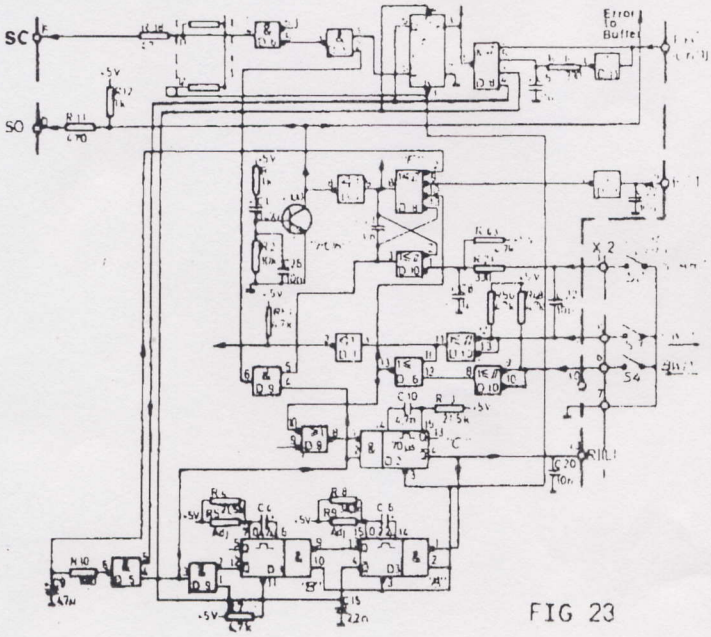

FIG 23

This happens if no ERROR has occured and the signal from the feed hole, FH, has been detected within this time limit plus an extra time limit made by C9·R10 (approx. 3ms). If no FH has arrived before this last delay has run out, F (error) is 1-set.

This means that a delay between start signal RI(L) and the acceptance of feed hole is arranged thus allowing disturbances to occur during start up of step movement. When the control panel is used and S3 or S4 controls the tape feed, the pressing of any of the two switches results in three things:

1. creation of RI(L), regardless of acceptor condition.
2. setting D in accordance with wanted stepping direction.
3. setting of F (=ERROR). Error-lamp on panel lights up.

As long as F is set (ERROR), reset condition exists for the buffer and SO=0. Reset of F can only be done with S2 (START) on the control panel.

The content of the buffer is constantly checked for ODD parity. The result of the check is transmitted as P and D8=D8'with straps W3 & W4 connected as shown in Fig. 24.

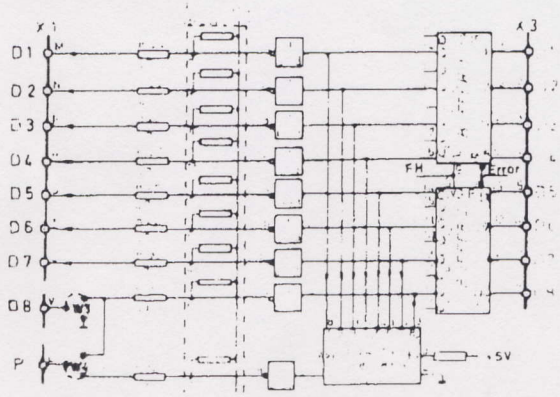

FIG 24

With the straps in the other position P=D8' and D8=0.

The servo spooler 4013 only uses the interface for transfer of signal MR from the servo spooler to the stepper motor circuits and to apply common ground.

The POR circuit (V100) provides ERROR condition until the voltage reaches approved level.

Finally the two straps, W1 & W2, are used to connect ground and shield from the acceptor.

5.3 UNIVERSAL - INTERFACE

See Fig. 25, 28 & APP. 3

The universal interface is intended to be used together with the servo spooler where the acceptor can order both high speed (HS) and change stepping direction (SD).

Data from the reader are constantly fed through the line drivers to the acceptor. Data are also checked for parity. With the straps G or H, EVEN or ODD parity can be selected. See Fig. 27.

Depending upon the position of straps A & B, D8 might be D8 or logical 0 and P might be Parity bit or D8.

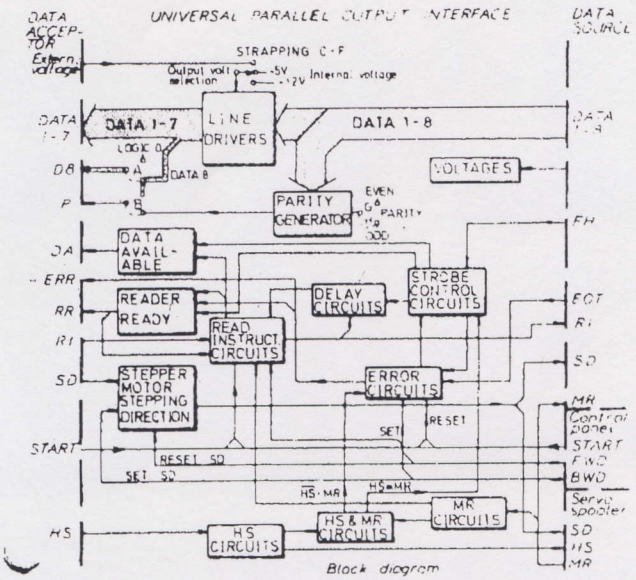

FIG 25

FF's; position and logic 1 output. A=D8:13, B=D8:5, C=D6:13, D=D7:5, E=D4:8, F=D6:5, G=D7:9.

START is differentiated over C26 and gives FWD during a short time, long enough to trigger C which gives RI(L). See Fig. 26.

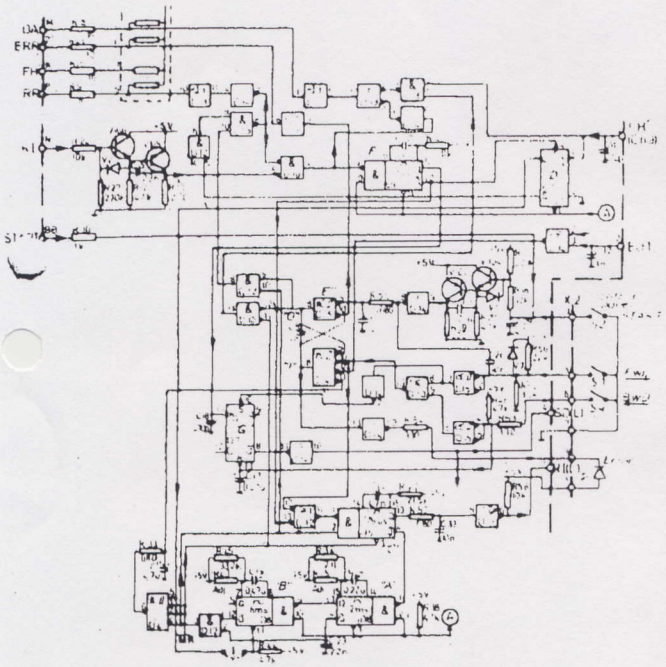

FIG 26

FWD gives ERROR but in this case the signal START keeps E reset. RI(L) to 4031 triggers the FF's for the stepper motor which performs one step in the decided direction. When the tape has been fed one character there are new data on the line drivers. RR exists and if the acceptor now sends RI, DA is directly transmitted back to the acceptor.

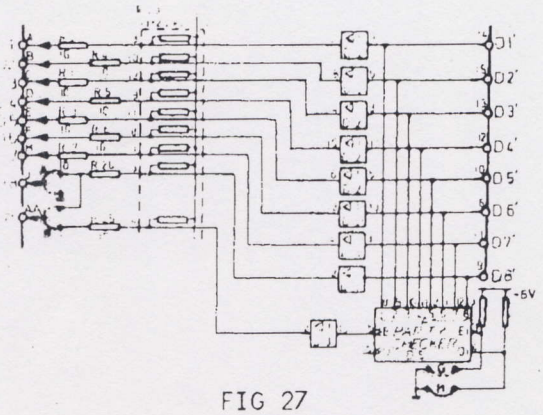

FIG 27

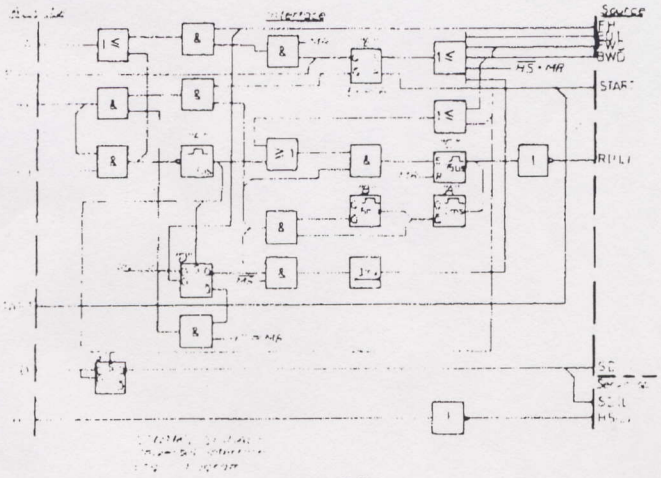

FIG 28

DA means that data on the lines are available and valid.

The trailing edge of RI triggers F which does three things:

1. triggers C which sends RI(L) to the tape reader.
2. sets D in order to check if FH' arrives or not within the time delay allowed.
3. gives clock pulse to G so that a possible change of stepping direction may be set up.

C triggers the two delay FF's A & B and as long as any of those are 1-set, C is blocked for new input. These delays, approx. 2ms and 6ms, gives the shortest interval between two RI(L); 120ch/s. If no FH' has arrived after this delay a pulse to the ERROR FF is set up (DA:6) and is integrated (R33, C15) giving an extra 3ms delay before E is 1-set. When HS is ordered from the acceptor, this signal results among other things in signal MR. As long as HS and MR are alike, condition for RR exists. MR resets C thus inhibiting RI(L) and the operation of A & B. This means that RI from the acceptor now only operates F & D and also provides DA. FH'operates D like before. The reading speed is now controlled by the servo spooler motors, left or right, and the take up wheel diameter. The acceptor must ask for data with RI within

reading speed, approx. 700ch/s, can be achieved.

If S2 or S3 on the 4013 control panel is used, HS and MR will be unequal. $\overline{HS}\cdot MR$ 1-sets E and signal ERR is transmitted to the acceptor and the ERROR lamp is lighted up on the control panel.

When operated from the control panel, FWD & BWD 1-sets E and triggers C which starts the tape feed. BWD resets G which gives SD(L).

START may come from the control panel or from the acceptor. The signal must be min. 1ms and logic 0.

Voltages for the interface come from 4030 power supply. See Fig. 29.

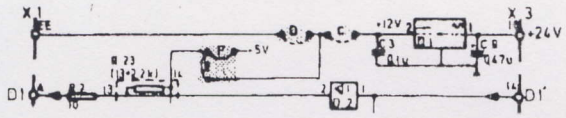

FIG 29

When strap F is used +5V is the output voltage for the line drivers. If straps C & E are used the output voltage is +12V from the DC regulator and if straps D & E are used the voltage is depending upon an external voltage, V_E, max. +15V on X1:EE. See Fig. 29.

+5V is connected to X1:MM where it simply indicates that interface is under voltage and ready to be used. It is also possible to use X1:K, FH, for the same or similar purpose.

5.4 SERIAL - INTERFACE

See Fig. 30 & APP. 4

The interface can be used either in a voltage level connection or in current loop connection. In voltage level connection some signal names and connector pins are used in accordance with C.C.I.T.T. recommendation V24. In current loop only the serial data out operates in current loop. The loop may work as active or passive.

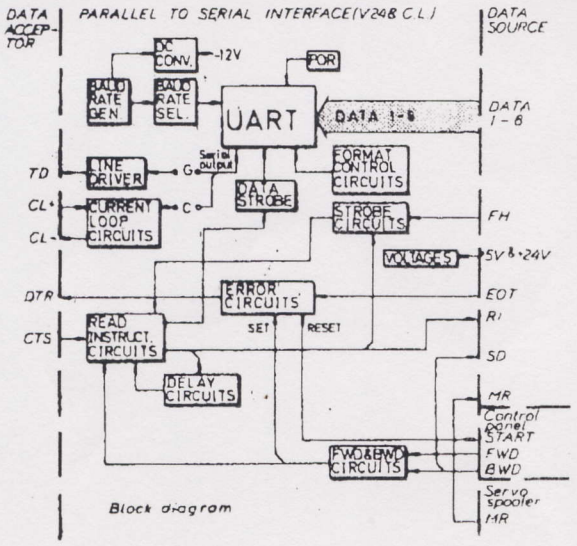

FIG 30

FF's; position and logic 1 output. A=D3:13, B=D3:5, C=D17:13, E=D10:3, F=D7:8.

5.4.1 Reading

The acceptor transmits signal CTS which triggers C if there is no error and the last character has been transmitted to the acceptor and there are data in the reader buffer. C gives a pulse, RI(L), to the stepper motor circuits and the delay circuits A & B.

CTS also triggers D, which gives the data strobe for parallel input of data from the reader buffer to the UART which transforms it into serial form according to the format set up with straps J-M and V (see 2.6.6). This serial data are passed through strap G and the line driver D5:2-1, to X1:2 as TD. The data are transmitted in the form shown in Fig. 31.

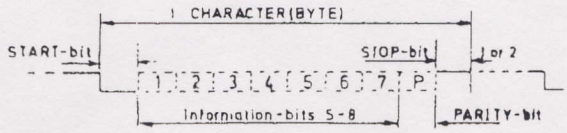

FIG 31

The start is shown in enlarged view in Fig. 32 with the clock pulses from the selected baud rate.

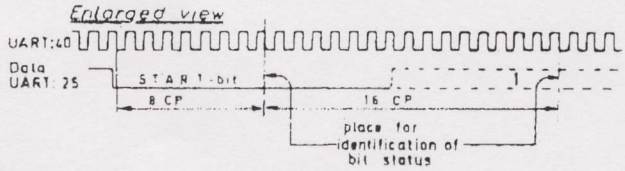

FIG 32

The start of the delay circuits, A & B, by RI(L) 1-sets E, indicating that a call for information has been made. When the stepper motor has moved the tape one character, the feed hole is detected and transferred into signal FH'. FH' 0-sets E which allows a new CTS to trigger C if the delay A & B has passed, if there is no error and if the preceding character in UART is transmitted in serial form. The delay A & B, 2ms + 6ms, determines the highest reading speed, 120ch/s. See Fig. 33.

End of the tape, EOT, will 1-set F and signal DTR=low is transmitted to the acceptor, indicating ERROR. F is 1-set when FWD or BWD on the control panel is used or, if after giving RI(L), no FH' arrives before the delay of A & B and R24·C11 (approx. 3ms) total approx. 11ms.

F can only be 0-set with START from the control panel. This signal is differentiated via C7, giving FWD. FWD triggers C and gives one RI(L). It also tries to 1-set F but START, min. 1ms, is much longer and F remains 0-set.

Every time F is 1-set, the ERROR lamp on the control panel lights up.

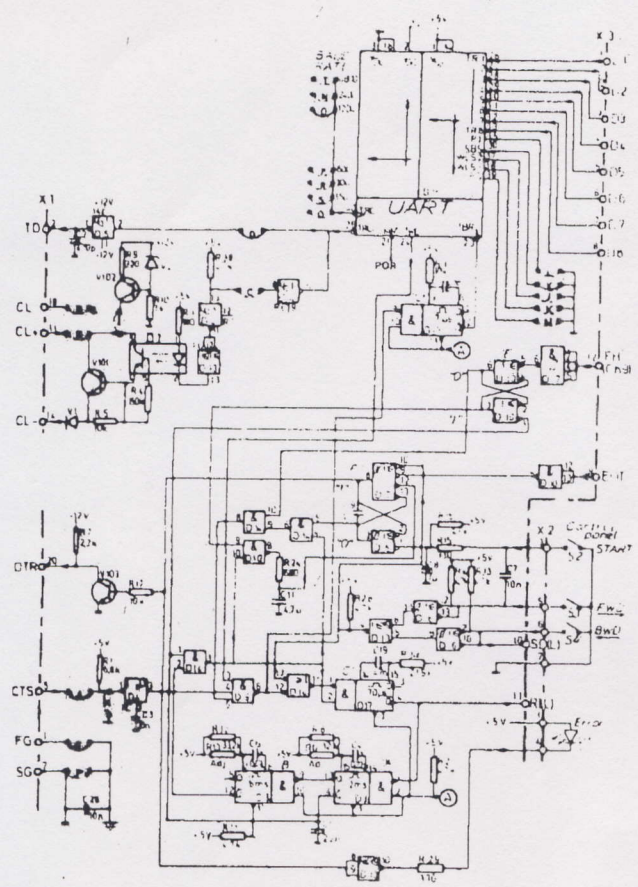

FIG 33

5.4.2 Active current loop
See Fig. 33 & 34

There is no difference between voltage level connection and the current loop up to the output from UART. When current loop is used, strap C is used instead of G.

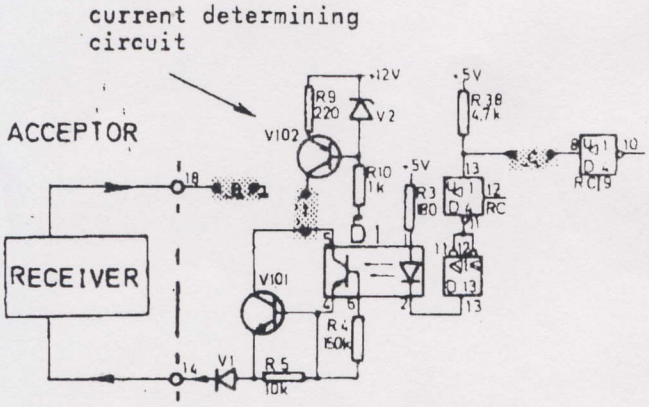

FIG 34 ACTIVE CURRENT LOOP

The serial output controls the current in opto coupler D1. The interface determines the current with R9, V2 and V102. The acceptor only detects the current interrupt.

5.4.3 Passive current loop
See Fig. 33 & 35

In the passive current loop the acceptor determines the current value.

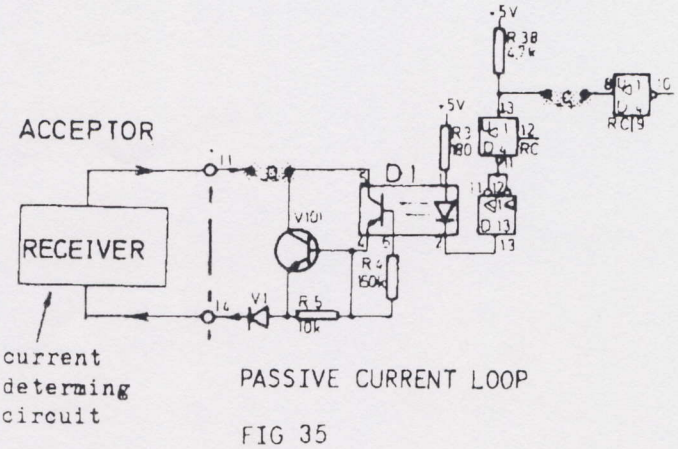

PASSIVE CURRENT LOOP

FIG 35

The acceptor has only one way to get control informations from the data source and that is on DTR. This "busy"-signal indicates ERROR when low.

5.4.4 Voltage converters
See Fig. 36

-12V derives from the oscillating circuit L1. The baud rate generator supplies a frequency of 19.2kHz, V105 determines the energy into L1. The output is checked and fed back by V107 to V106 which is a part of V105 base impedance.

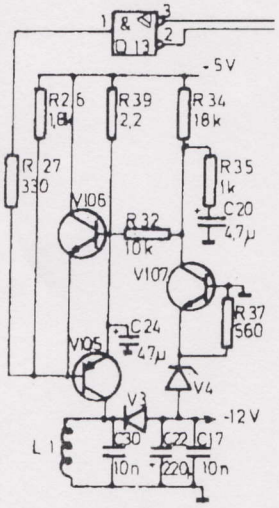

FIG 36

When -12V is getting more negative, the impedance of V106 becomes smaller thus reducing energy to L1. On the other hand, if -12V gets less negative, the current in V107 gets greater and thus also the energy to L1.

+12V derives from a voltage regulator, D2.

5.4.5 Baud rate generator
See Fig. 37

The baud rate generator consists of an X-tal controlled oscillator with the frequency of 4.915MHz.

This frequency is divided in BRG1, BRG2 & BRG3. Baud rates from 4800 bps to 75 bps are obtained by frequency dividing except for the baud rate 110 bps that uses the reset circuit of BRG3. The different

possibilities by using straps N to U are described in 2.6.7.

Each word bit consists of 16 cp´s.

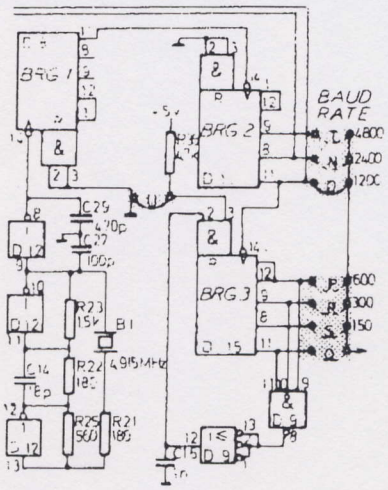

FIG 37

6 SERVICE

BEFORE ANY INSTALLATION, MAKE SURE THAT THE VOLTAGE SELECTORS S2 (Power unit 4030) AND S4 (Servo spooler 4013) ARE SET IN CORRECT POSITION, see Fig. 38 & 39, AND EQUIPPED WITH CORRECT FUSE VALUES.

6.1 DESIGN

4030 is built up on two 19" racks. On the upper one the reader 4031, the power unit 4030 and the interface are placed, see Fig. 38.

On the lower one a tape handling device is placed. In Fig. 39 the 4013 is shown.

The different parts are interconnected with cables and are easily removed. The reader 4031, see Fig. 40, is mounted from the backside of the upper rack but the retainer screws are located on the front side.

Each unit fits to all the other units. There is no adjustment needed when changing one unit with another.

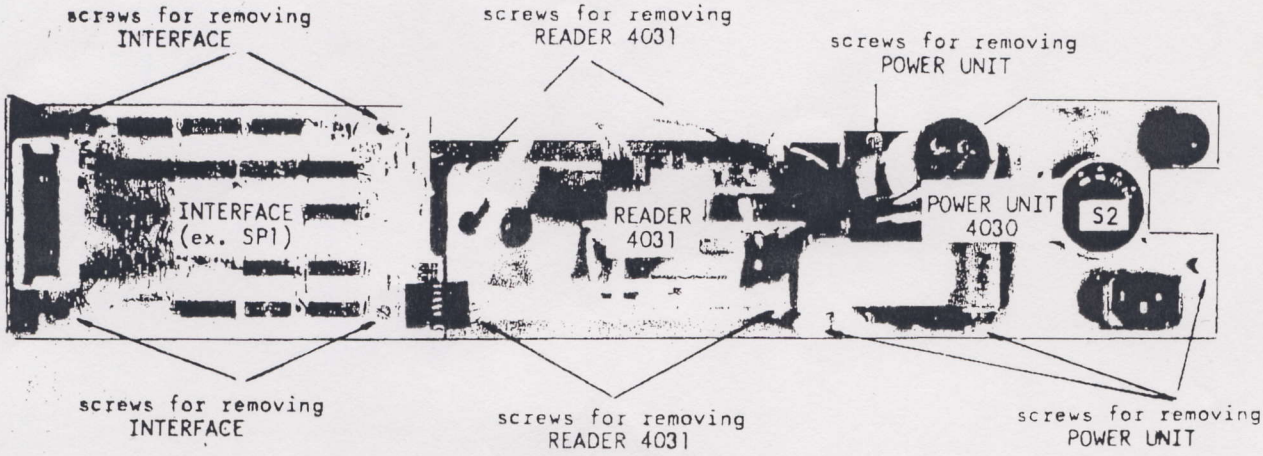

FIG 38

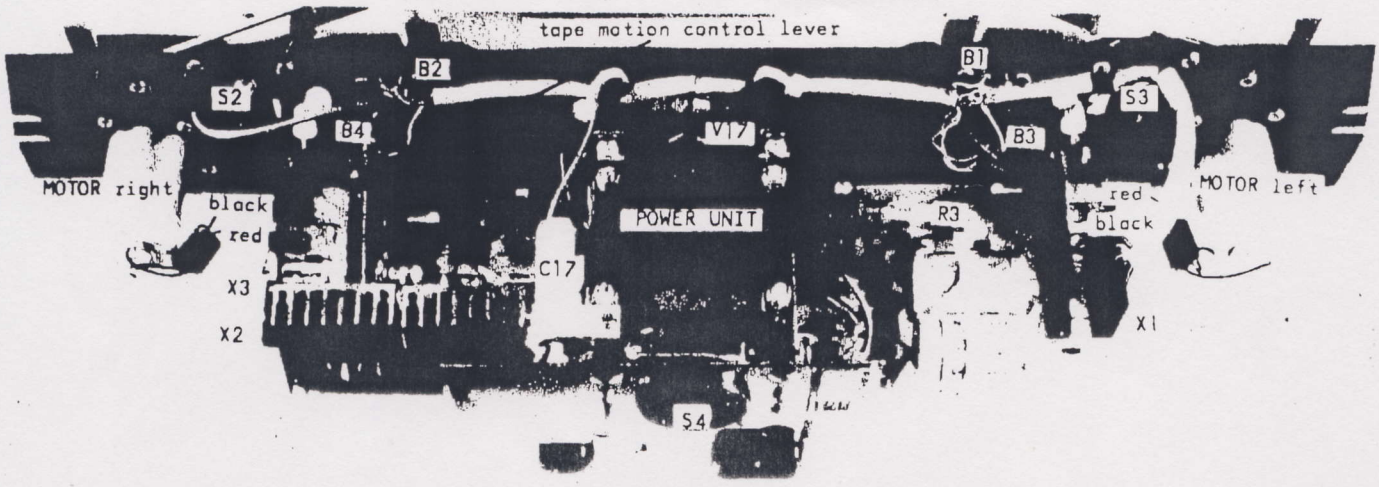

FIG 39

6.2 CHECKS & ADJUSTMENTS

6.2.1 Reader 4031

6.2.1.1 Mechanical

1. Check that the sprocket wheel inner peripheri coincides with the main housing. Adjust by moving the main housing.
2. Check that the sprocket wheel is placed in the centre of the slot in the main housing. See Fig. 41.
   Adjust by moving the sprocket wheel.
3. Check that the tape slot between lamp housing and main housing is 0.3-0.4mm. Adjust by moving lamp housing up or down.
4. If the stop-screw for circuit board positioning has been moved for some reason, proceed as follows to obtain the best possible position for the PWB: connect a high impedance instrument to the collector of the phototransistor for FH. Move the PWB in and out until the position with the lowest possible voltage is found. Lock the stop-screw and tighten the screws to hold the PWB in this position.

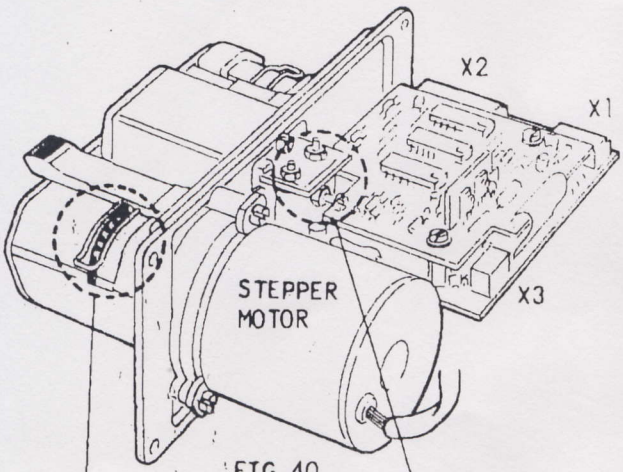

FIG 40

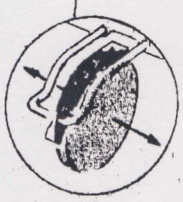

FIG 41

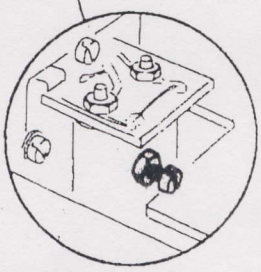

FIG 42

5. When the lamp is replaced it must be positioned with the filament vertical. The lamp can be focused by moving it sideways. When the lamp is correctly focused a light spot can be observed in the centre of the light guide when viewed from the front. The lamp must then be secured with glue.

6.2.1.2 Electrical

1. If the lamp of photo transistor array is replaced, check with a double folded test paper inserted in the read head that the voltage across the photo transistor is more than 3V (3.5V for FH). If necessary adjust by replacing the collector resistor for the photo transistor in question (R12, R16-24). Check also that the voltage without paper is less than 0.22V.
   NOTE When measuring voltages across the photo transistors the emitter must be used as reference point. R15 is a suitable point for the ground connector.
2. To adjust the tape position relative to the read head, connect an oscilloscope to R21 or C16 (see circuit diagram). Load the reader with a tape punched in all channels and operate the reader at 120ch/s. Observe the pulses during operation. Turn the motor in one direction (after loosening the screws see Fig. 43) until the pulses start being bad. Make a pencil mark on the motor.

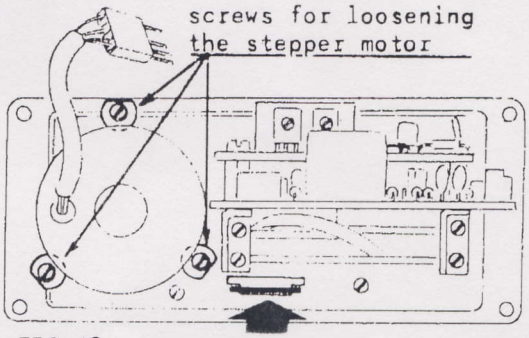

FIG 43

   Turn the motor in the opposite direction until the pulses again start to be bad. Make another mark with the pencil and let the motor get a position half way between the two marks from the pencil.
3. The current used on the +24V line should be 360 ± 20mA. Adjust by replacing R38. The higher R the lower current.

6.2.2 Servo spooler 4013

6.2.2.1 Mechanical

1. If changing or moving any of the motors ensure there is sufficient radial play.
2. Check the action of the lower guide wheel lever on the tape motion knob (see Fig. 44 & 45). The examples show the knob in BACKWARD position and the guide lever in its highest position (Fig. 44).

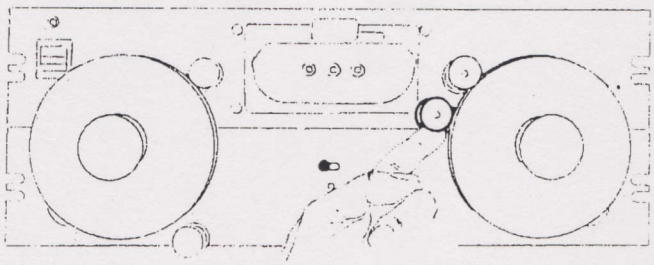

FIG 44

SPECIFICATION

Reading speed	0 - 120 ch/s bidirectional
Reading method	Optical
Tape feed	Stepping motor and sprocket
Tape widths	5 track 17.5 ± 0.1mm (11/16") 6 and 7 track 22.2 ± 0.1mm (7/8") 8 track 25.4 ± 0.1mm (1")
Inter character spacing	As per ISO standard 2.54mm ± 0.5% accumulative over 50 rows 2.54mm ± 3% between adjacent rows

Thickness of tape	Max 0.25mm including splice
Tape material	All types with transmissivity of up to 60%
Temperature	Operation +5 to +55°C Storage -10 to +70°C
Relative humidity	20 to 85%

Dimensions and weight	Read head mm	in
Height	68	2.68
Width	150	5.90
Depth beh. panel	80	3.15
Depth in fr. of panel	67	2.64
Weight kg (lb)	1.1	(2.4)

All input/output signals are TTL compatible

Input signals	Logical 1 +2.4 to +5.3V Logical 0 0 to +0.4V at 1.6mA
SD = Stepping direction	Forward = logical 1 or open Backward = logical 0
RI = Read instruction	Logical 0 Pulse width 25-100µs
MR = Motor release	Logical 1

Output signals	Logical 1 +2.7V to +5.3V at 400µA Logical 0 0V to +0.4V at 4mA
Data channels 1-8 feedhole and EOT	Hole and EOT = Logical 1 No hole = Logical 0
Voltage requirements	+24V ± 5V max 400mA (800mA peak, duty cycle 50%) +5V ± 0.25V max 300mA

TIMING DIAGRAM

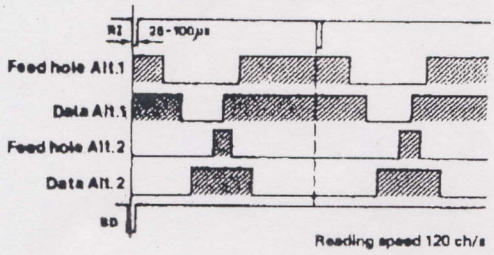

- Stepping direction pulse SD shall overlap RI with 2µs on each side
- Reading mode Alt 1: Reading of data with stationary tape
- Reading mode Alt 2: Reading during tape movement

CONSTRUCTION

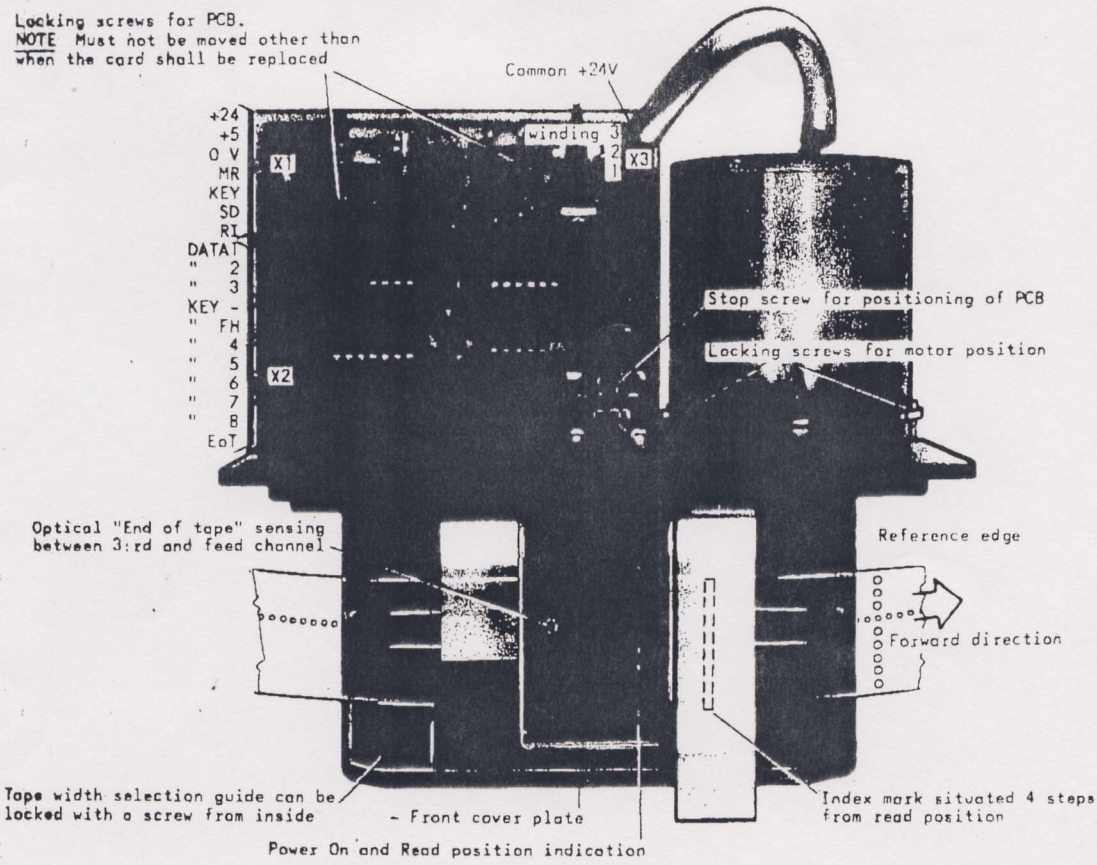

CHECKS AND ADJUSTMENTS

1. Check that the sprocket wheel inner peripheri coincides with the main housing.
   Adjust by moving the main housing.

2. Check that the sprocket wheel is placed in the centre of the slot in the main housing.
   Adjust by moving the sprocket wheel.

3. Check that the tape slot between lamp housing and main housing is 0.3 - 0.4mm.
   Adjust by moving lamp housing up or down.

4. If the stopscrew for circuit board positioning has been moved for some reason, proceed as follows to obtain the best possible position for the PCB: Connect a high impedance instrument to the collector of one of the phototransistors.* Move the PCB in and out until the position with the lowest possible voltage is found. Lock the stopscrew and tighten the screws to hold the PCB in this position.

5. If the lamp is replaced the lamp voltage must be adjusted so that the collector voltage on the photo transistors is 0.19 - 0.23V when no paper is inserted in the reader.* The lamp voltage must be ≤4.75V at nominal input voltage. Adjust on R4 for data channels and R2 for EOT. If the phototransistor array is replaced, the above collector voltage must be adjusted by means of R19 - R28.

6. Since the sprocket wheel is fastened directly on the motor shaft, the tape position relative to the read head can be adjusted by turning the motor. Connect an oscilloscope to V107 base and drive the reader at 120ch/s. Turn the motor until the pulses appear as shown on Fig. A, when the tape is run in both directions.
   NOTE Use a tape with correct inter character spacing.

*NOTE When checking collector voltages connect ground probe to the emitter.

CIRCUIT DIAGRAM

FIG A

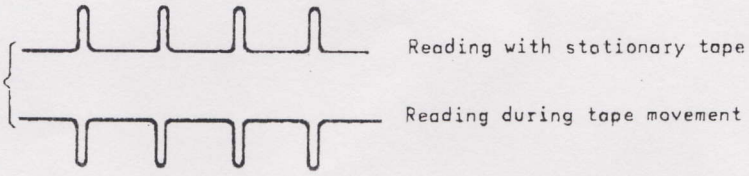

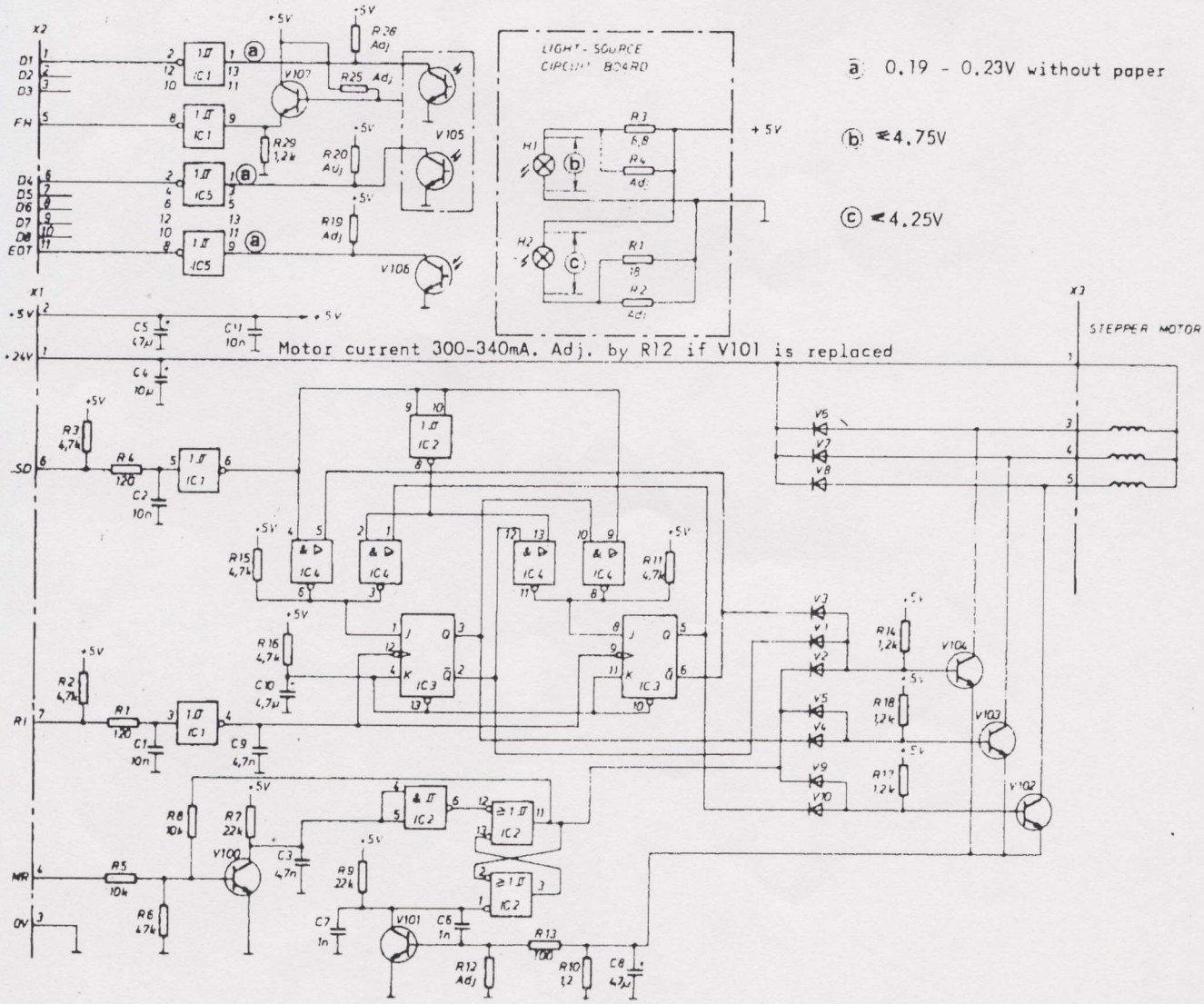

SPARE PARTS LIST

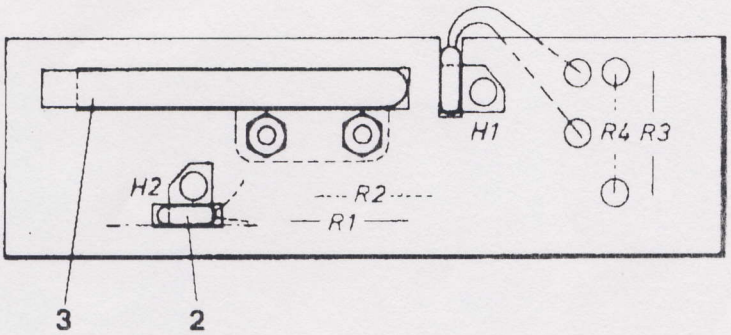

R2,4 To be tested out 1/4W

1159 34 10-60/5	3.3	10%
1159 22 07-70/5	6.8	5%
1159 22 00-10/6	10	5%
1159 22 00-30/4	15	5%

Component designation	Part No.	Description
1	1142 19 80-00/1	Light source board
R1	1159 22 00-40/3	Res 18 1/4W 5%
R3	1159 22 07-70/5	Res 6.8 1/4W 5%
R2,4	1159 22 0x-xx	Res 6.8 - 15 1/4W 5%

Component designation	Part No.	Description
H1,2	1069 10 64-10/8	Lamp
2	1142 20 40-00/3	Lamp holder
3	1142 19 50-00/4	Light guide

R12 To be tested out 1/4W 5%

1159 22 01-40/1	120	1159 22 01-90/6	330
1159 22 01-50/0	150	1159 22 02-00/3	390
1159 22 01-60/9	180	1159 22 02-10/2	470
1159 22 01-70/8	220	1159 22 02-20/1	560
1159 22 01-80/7	270	1159 22 02-30/0	680

R19-28 To be tested out 1/4W 5%

1159 22 03-30/8	4.7k	1159 22 04-00/9	18k
1159 22 03-40/7	5.6k	1159 22 04-10/8	22k
1159 22 03-50/6	6.8k	1159 22 04-20/7	27k
1159 22 03-60/5	8.2k	1159 22 04-30/6	33k
1159 22 03-70/4	10k	1159 22 04-40/5	39k
1159 22 03-80/3	12k	1159 22 04-50/4	47k
1159 22 03-90/2	15k		

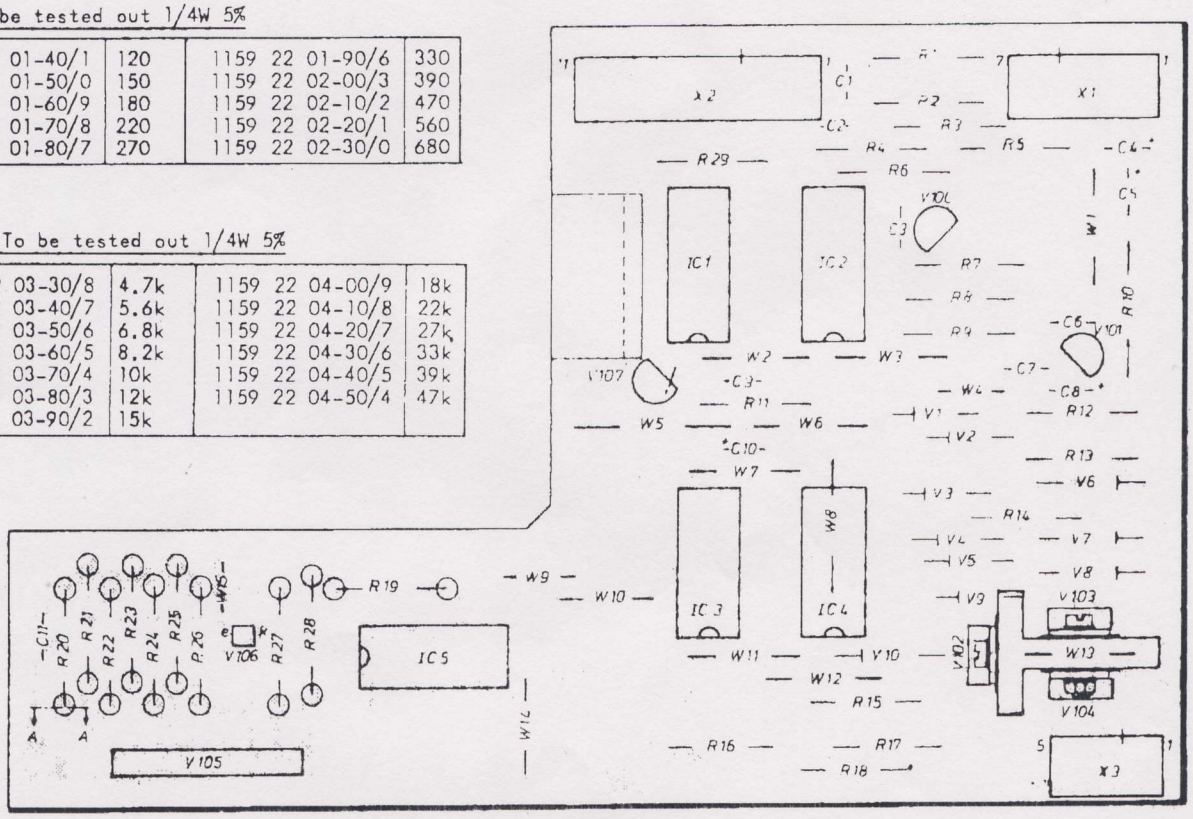

Component designation	Part No.	Description
1	1140 12 40-00/4	Circuit board compl.
IC1,5	1063 60 11-10/7	IC SN74LS14N
IC2	1063 60 12-10/5	IC SN74LS132N
IC3	1063 60 42-50/8	IC SN74107N
IC4	1596 03 80-00/2	IC SN7403N
V100,101, 107	1063 40 01-10/0	Trans BC238B
V102-104	1063 40 17-10/6	Trans BD267
V105	1063 50 01-10/9	Photo trans array
V106	1063 50 02-10/7	Photo trans
V1-5,9,10	1159 19 10-00/2	Diode IN4148
V6-8	1063 10 03-10/9	Diode IN4933
C1,2,11	1062 10 85-10/8	Cap 10nF 50V
C3,9	1062 10 70-10/0	Cap 4.7nF 63V
C4	1062 30 25-10/2	Cap 10µF 35V

Component designation	Part No.	Description
C5	1062 31 09-10/4	Cap 47µF 6.3V
C6,7	1062 10 37-10/9	Cap 1nF 63V
C8,10	1062 30 05-10/4	Cap 4.7µF 10V
R1,4	1159 22 01-40/1	Res 120 1/4W 5%
R2,3,11,15, 16	1159 22 03-30/8	Res 4.7k 1/4W 5%
R5,8,10	1159 22 03-70/4	Res 10k 1/4W 5%
R6	1159 22 04-50/4	Res 47k 1/4W 5%
R7,9	1159 22 04-10/8	Res 22k 1/4W 5%
R10	1061 11 60-50/7	Res 1.2 0.7W 10%
R13	1159 22 01-30/2	Res 100 1/4W 5%
R14,17,18, 29	1159 22 02-60/7	Res 1.2k 1/4W 5%
R12	1159 22 0x-xx	Res 120-680 1/4W 5%
R19-28	1159 22 0x-xx	Res 4.7k-47k 1/4W 5%

SPARE PARTS LIST

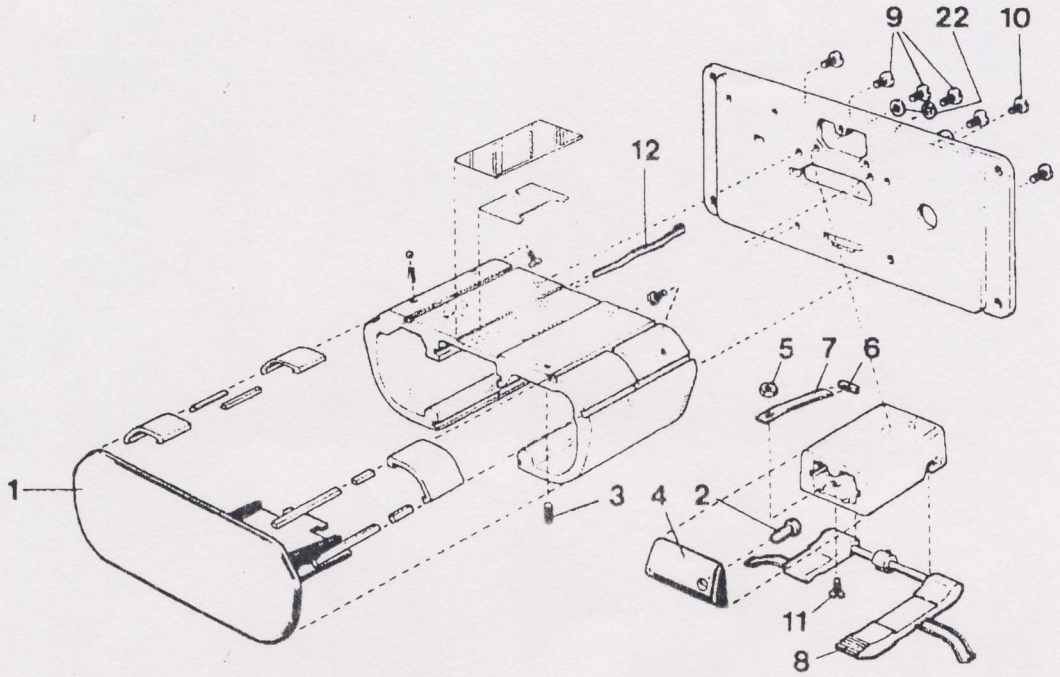

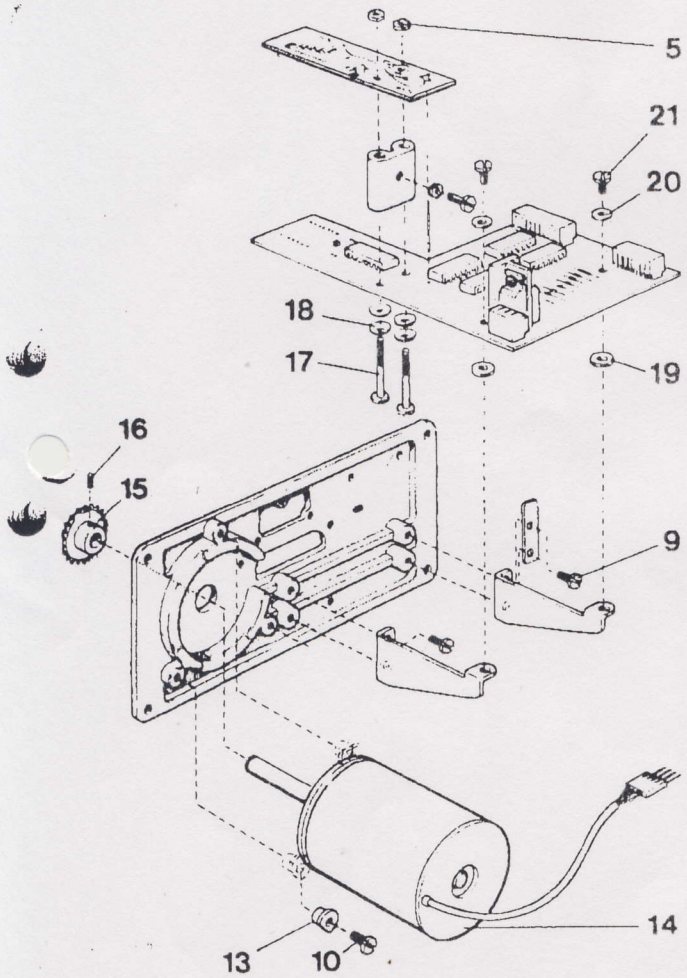

Item No.	Part No.	Description
1	1142 17 40-10/8	Lid
2	1142 20 50-00/2	Light guide
3	1142 17 80-00/5	Screw
4	1142 17 50-10/7	Lid
5	0731 23 09-03/7	Nut M6M-2,5
6	1142 16 70-00/8	Plastic bearing
7	1142 16 80-00/7	Blade spring
8	1142 15 90-00/8	Tape guide
9	0723 12 20-01/8	Screw MCS-3x6
10	0723 12 22-01/4	Screw MCS-3x8
11	0723 51 91-01/7	Screw FS-2,5x6
12	1142 18 10-00/0	Blade spring
13	1142 18 30-00/8	Motor holder
14	1140 14 00-00/4	Motor
15	1142 18 60-00/5	Sprocket wheel
16	0728 82 17-00/8	Screw SK6SS-3x3
17	0723 22 03-33/6	Screw MSCS-2,5x25
18	1142 20 30-00/4	Washer
19	1146 77 30-00/5	Washer
20	0734 11 24-01/9	Washer BRB-3,2x7x0,5FZ
21	0723 12 19-01/0	Screw MCS-3x5
22	0734 11 24-60/5	Washer

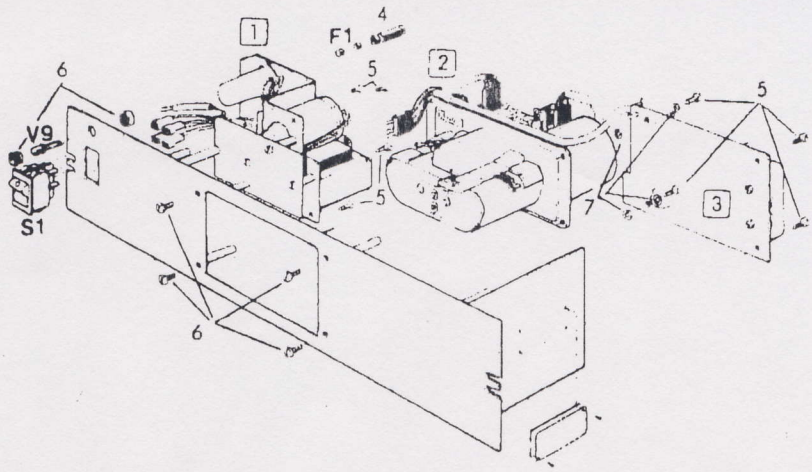

Item No.	Part No.	Description
1	1140 29 10-00/1	Power unit 4030 assy.
2	1140 28 40-00/0	Reader 4031 assy.
3	1142 21 00-00/5	Interface SP1
	1140 65 70-00/9	Interface Universal
	1140 60 60-00/1	Interface Serial
4	1069 11 00-50/6	Fuse carrier
	1069 11 01-50/4	Fuse carrier, Amer.
5	0723 12 85-01/1	Screw MCS 4x6 FZ

Item No.	Part No.	Description
6	1069 10 12-30/5	Holder for diode
7	1505 85 00-70/1	Washer
8	0723 22 87-33/9	Screw MSCS 4x8 FN
F1	1159 12 30-60/9	Fuse 160mAT
	8369 16 46-20/8	Fuse 375mAT, Amer.
V9	1063 21 05-10/1	LED, green
S1	1066 30 23-50/4	Switch

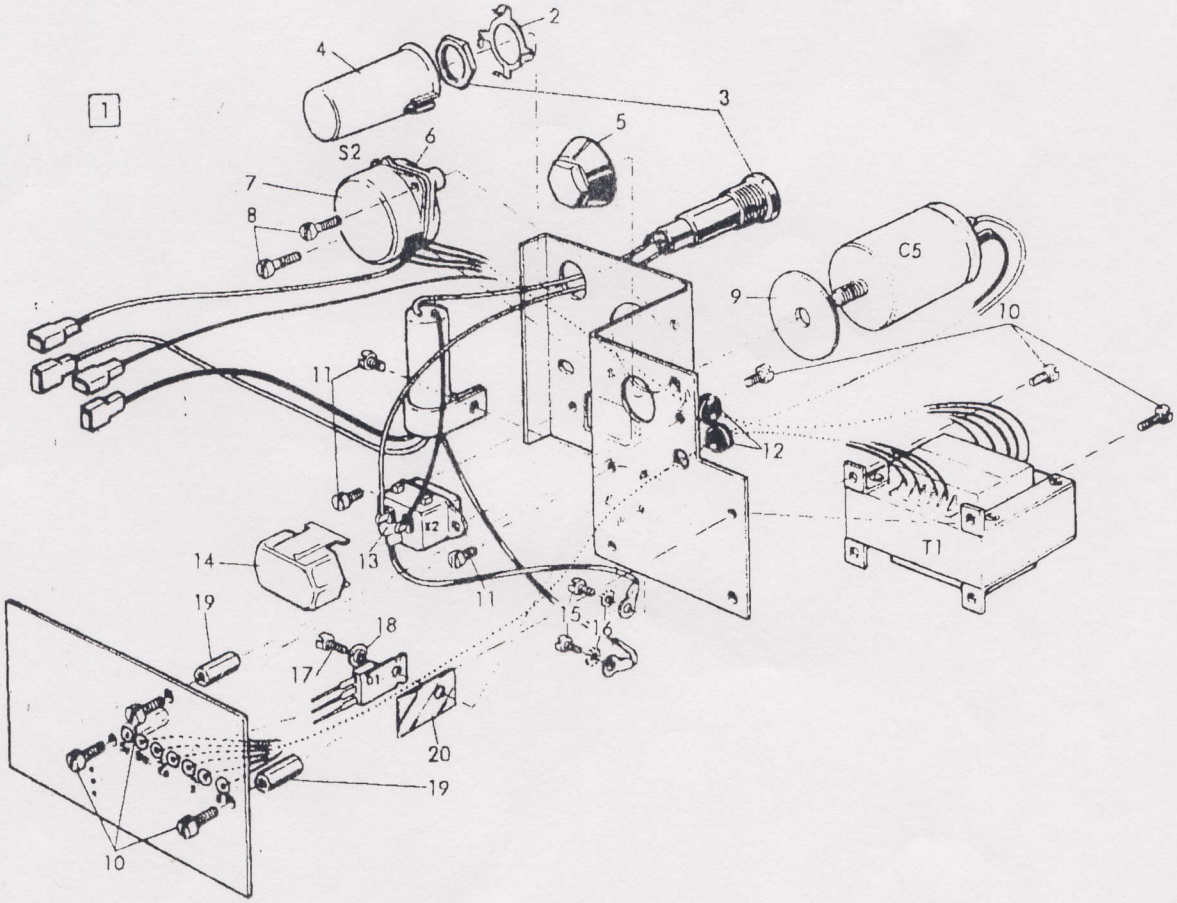

Item No.	Part No.	Description
1	1140 29 10-00/1	Power unit assy. 4030
2	1506 84 00-00/9	. Locking washer
3	1069 10 99-50/0	. Fuse holder
4	1506 84 10-00/8	. Fuse holder cover
5	1159 12 00-10/7	. Insulator nut M8

Item No.	Part No.	Description
6	1507 11 70-00/3	. Ring
S2	1066 40 01-10/3	. Switch
7	1507 28 20-00/2	. Protective cover
8	0723 12 24-01/0	. Screw MCS 3x10 FZ
9	1159 12 10-10/6	. Plastic washer

Item No.	Part No.	Description
10	0723 12 85-01/1	. Screw MCS 4x6 FZ
11	0723 12 17-01/4	. Screw MCS 3x3 FZ
12	1505 93 60-80/8	. Rubber bushing
13	1098 71 01-00/2	. Power inlet
14	1096 01 01-00/3	. Protective cover
15	0723 12 83-01/6	. Screw MCS 4x4 FZ
16	0735 21 36-01/9	. Lock washer 4,3
17	0723 11 89-01/5	. Screw MCS 2,5x4 FZ
18	1142 19 00-00/9	. Insulating bushing
19	1140 25 60-00/4	. Spacer sleeve
20	1159 38 00-00/3	. Insulator washer
C5	1062 30 94-50/4	. Cap 4700u 40V +50/-10%
C6	1062 20 76-10/6	. Line filter cap
T1	1140 28 90-00/5	. Transformer
D1	1063 60 10-10/9	. IC µA7805

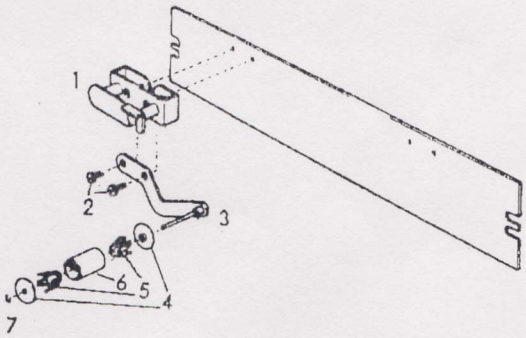

Item No.	Part No.	Description
1	1511 35 40-00/7	Tape roll holder
2	0723 12 20-01/8	Screw MCS 3x6 FZ
3	1140 65 10-00/5	Lever
4	1140 42 10-00/4	End plate
5	1140 41 90-00/8	Plastic spring
6	1140 42 00-00/5	Roller
7	0735 31 06-20/1	Retainer ring

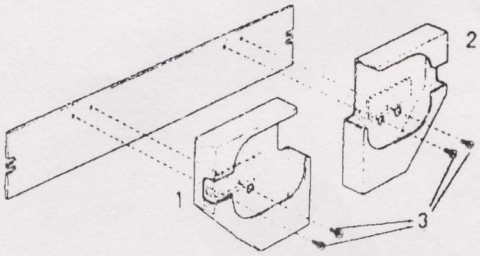

Item No.	Part No.	Description
1	1511 25 60-00/6	Casette left
2	1511 26 00-00/0	Casette right
3	0723 22 20-33/0	Screw MCSC 3x6 FN

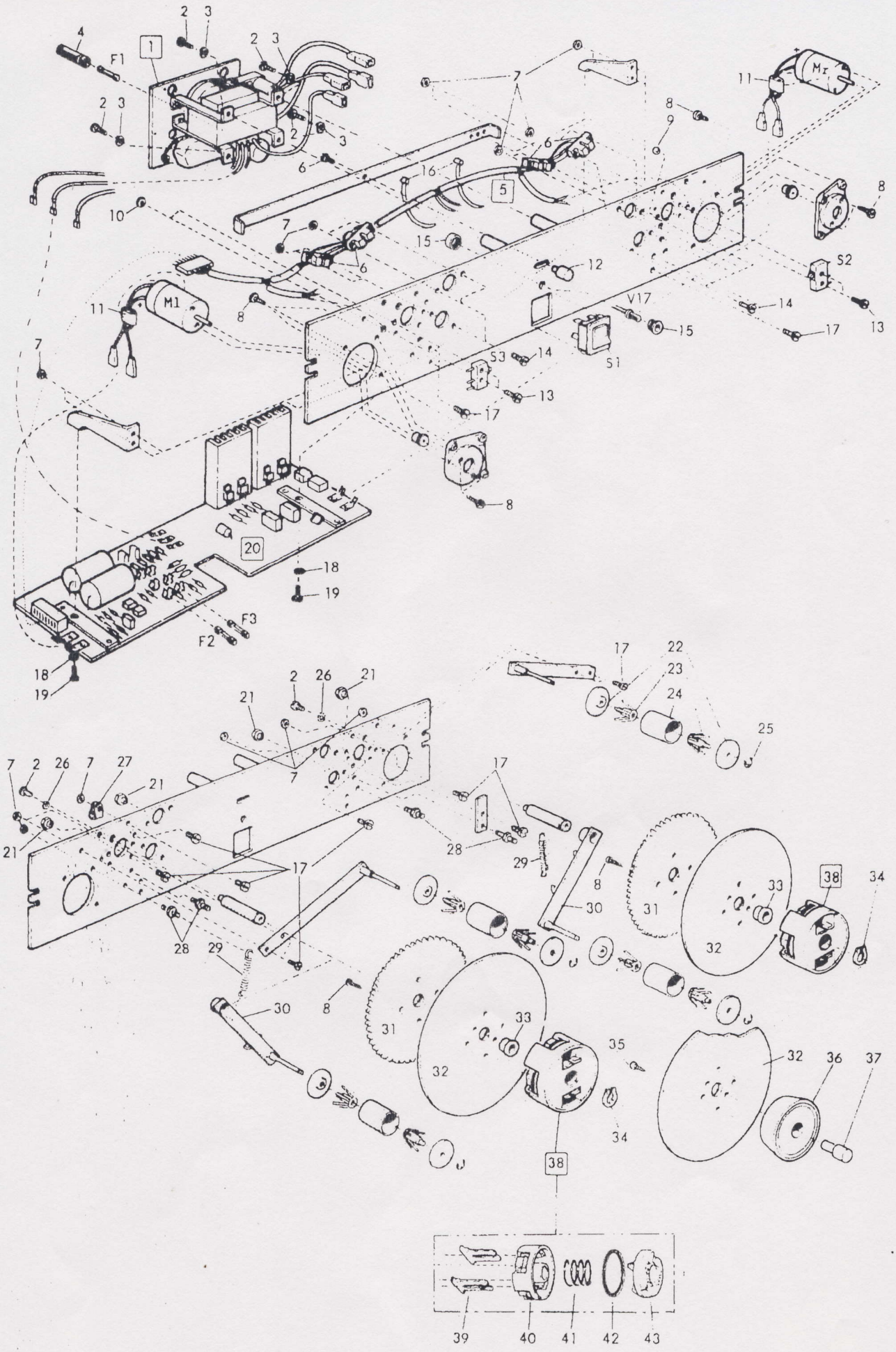
1
2
3
4
F1
5
6
7
8
9
10
11
M1
12
13
14
15
16
17
S1
S2
S3
V17
20
18
19
F2
F3
21
22
23
24
25
26
27
28
29
30
31
32
33
34
35
36
37
38
39
40
41
42
43

Item No.	Part No.	Description
1	1140 60 40-00/3	Power unit assy. 4013
2	0723 12 87-01/7	Screw MCS 4x8 FZ
3	0735 11 36-00/2	Lock washer FBB 4.1
4	1069 11 00-50/6	Fuse carrier
	1069 11 01-50/4	Fuse carrier, Amer.
5	1140 60 20-00/5	Cables assy.
6	1069 30 09-10/1	. Sensor assy. (B1-4)
7	0731 23 10-01/9	Nut M6M3 FZ
8	0729 52 25-01/0	Screw LKXS B4x10 RFR
9	0738 61 15-02/1	Ball
10		
10	0731 43 07-01/3	Nut ML6M2 FZ
11	1064 10 05-10/2	Ferrite core
12	1140 59 90-00/0	Button
13	0723 11 70-01/5	Screw MCS 2x12 FZ
14	0723 12 24-55/6	Screw MCS 3x10 OXSV
15	1069 10 12-30/5	Holder for diode
16	0762 91 01-05/1	Rope joint
17	0723 12 22-55/4	Screw MCS 3x8 OXSV
18	0735 21 24-01/5	Lock washer 3.2
19	0723 12 20-01/8	Screw MCS 3x6 FZ
20	1140 39 50-00/6	Circuit board 4013 assy.
FZ,3	1159 12 31-60/7	. Fuse 1.6AT
	8369 16 47-30/5	. Fuse 1.6AT, Amer.
21	1140 59 80-00/1	Spacing sleeve
22	1140 42 10-00/4	End plate
23	1140 41 90-00/8	Plastic spring

Item No.	Part No.	Description
24	1140 42 00-00/5	Roller
25	0735 31 06-20/1	Retainer ring
26	0735 21 36-01/9	Lock washer 4.3
27	1143 54 80-20/4	Cable clamp
28	1140 59 50-00/4	Spring knob
29	1005 00 53-10/6	Extension spring
30	1140 58 20-00/9	Lever
31	1140 59 20-00/7	Drive gear
32	1140 59 10-00/8	End plate
33	1140 59 70-00/2	Bushing
34	0735 31 12-00/1	Retainer ring DIN 471
35	0729 62 25-01/9	Screw FXS B4x9.5 FZ
36	1140 65 40-00/2	Grip ring
37	1140 65 50-00/1	Stud
38	1149 11 90-10/1	Hub compl.
39	1504 13 80-00/5	. Catch
40	1504 13 60-00/7	. Hub
41	1005 10 49-10/3	. Compression ring
42	1149 05 00-00/3	. Rubber ring
43	1504 13 70-00/6	. Sleeve
Mr,M1	1159 37 40-00/1	Motor
S1	1066 30 23-50/4	Switch
S2,3	1066 30 05-50/1	Switch
F1	1159 12 30-60/9	Fuse 160mAT
	8369 16 46-20/8	Fuse 375mAT, Amer.
V17	1063 21 05-10/1	LED

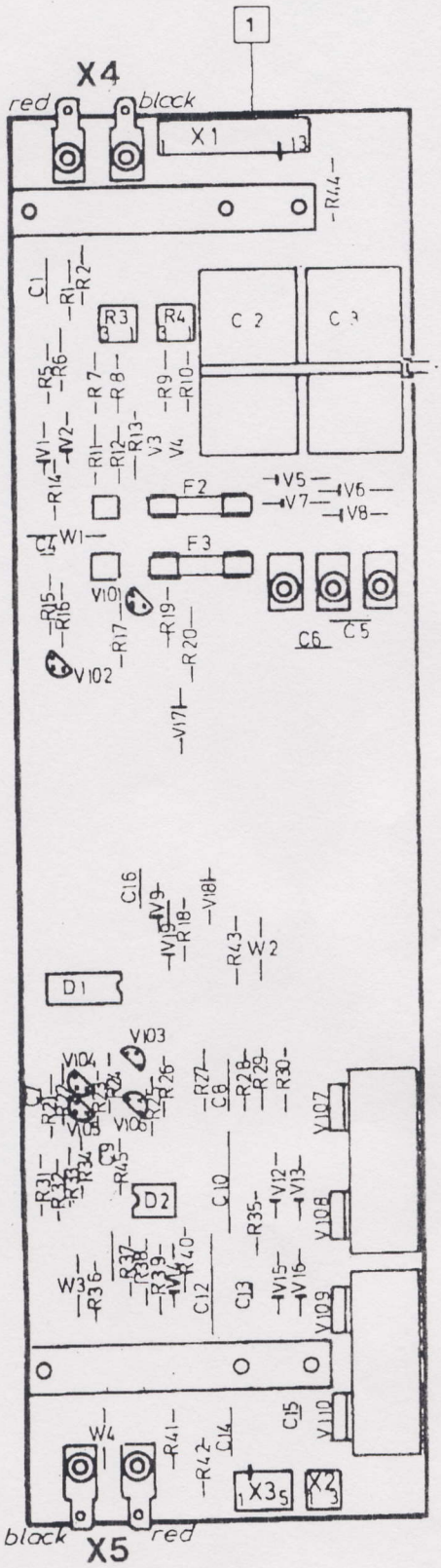

Component designation	Part No.	Description
1	1140 89 50-00/1	Circuit board compl.
D1	1159 20 80-00/3	IC SN7402N
D2	1063 60 74-50/1	IC SN72558
V101,103,106	1063 40 00-10/2	Trans BC308
V102,104,105	1063 40 01-10/0	Trans BC238
V107,108	1063 40 17-10/6	Trans BD267/TIP120
V109,110	1063 40 16-10/8	Trans BD266/TIP125
V1,2,11,14	1159 19 10-00/2	Diode 1N4148
V3,4	1063 20 36-10/8	Diode BZX71C5V6
V5-8	1159 09 90-00/0	Diode 1N5401
V9	1063 20 35-10/0	Diode BZX71C5V1
V12,13,15,16	1596 09 90-00/2	Diode 1N4001
C1,8,11,14	1062 22 15-10/0	Cap 0.22µ 63V 20%
C2,3	1596 05 63-30/0	Cap 4700µ 25V +50/-10%
C4,16	1062 32 66-12/2	Cap 10µ 35V +50/-20%
C5,6	1062 22 13-10/5	Cap 0.1µ 63V 20%
C7,9,13,15	1062 10 85-10/8	Cap 10n 50V +50/-20%
C10,12	1596 05 63-00/3	Cap 100µ 16V +100/-10%
R1,42	1159 22 00-10/6	Res 10 1/4W 5%
R2,41	1159 22 02-20/1	Res 560 1/4W 5%
R3,4	1061 40 59-50/8	Res 5k 1/2W 20%
R5,6,11,12, 25,26,44	1159 22 02-50/8	Res 1k 1/4W 5%
R7-10	1159 22 04-00/9	Res 18k 1/4W 5%
R13,20	1061 20 32-10/1	Res 470 1/2W 10%
R14,18	1159 22 01-90/6	Res 330 1/4W 5%
R15,29,36	1159 22 04-50/4	Res 47k 1/4W 5%
R16,19,23, 24,35,40	1159 22 03-70/4	Res 10k 1/4W 5%
R17,21,22, 30,33,34,39	1159 22 03-30/8	Res 4.7k 1/4W 5%
R27,38	1159 22 03-90/2	Res 15k 1/4W 5%
R28,37	1159 22 05-10/5	Res 150k 1/4W 5%
R31,32	1159 22 01-40/1	Res 120 1/4W 5%
R43	1159 22 02-30/0	Res 680 1/4W 5%
R3,4	1061 40 57-50/2	Res 1k 1/2W 20%
R46-49	1159 22 02-90/4	Res 2.2k 1/4W 5%
C17	1506 84 10-00/8	Line filter cap
S1	1066 30 23-50/4	Switch
T1	1140 40 50-00/4	Transformer
F1	1159 12 30-60/9	Fuse 160mAT
	8369 16 46-20/8	Fuse 375mAT, Amer
F2,3	1159 12 31-60/7	Fuse 1.6AT
	8369 16 47-30/5	Fuse 1.6AT, Amer

Modification making it easier to adjust to the proper voltage according to 6.2.2.2

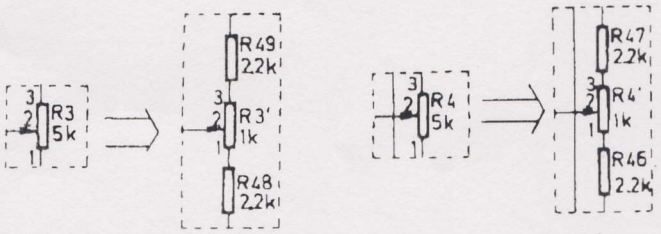

FIG A

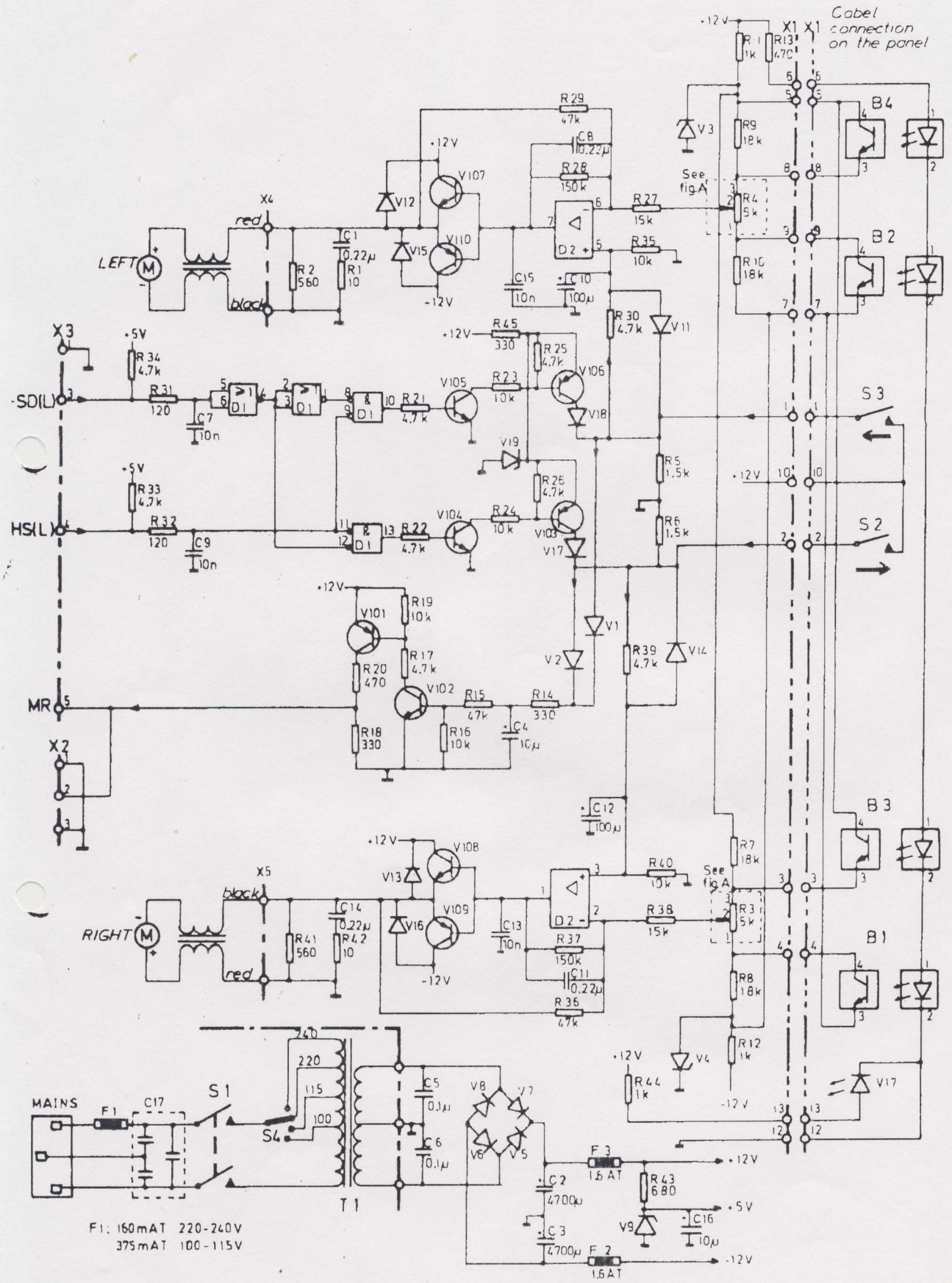
Cabel connection on the panel
X1
B4
B2
B3
B1
S3
S2
S1
S4
LEFT
RIGHT
MAINS
F1
C17
T1
F1: 160mAT 220-240V
375mAT 100-115V
F3 1.6AT
F2 1.6AT
+12V
-12V
+5V
-SD(L)
HS(L)
MR
X3
X2
X4
X5
red
black
See fig.A
D1
D2
V107
V110
V105
V106
V104
V103
V101
V102
V108
V109
V5
V6
V7
V8
V9
V17
V4
R29 47k
R28 150k
R27 15k
R35 10k
R30 4.7k
R45 330
R25 4.7k
R23 10k
R21 4.7k
R26 4.7k
R24 10k
R22 4.7k
R5 1.5k
R6 1.5k
R39 4.7k
R19 10k
R17 4.7k
R20 470
R18 330
R15 47k
R14 330
R16 10k
R40 10k
R38 15k
R37 150k
R36 47k
R41 560
R42 10
R2 560
R1 10
R34 4.7k
R31 120
R33 4.7k
R32 120
R44 1k
R43 680
C1 0.22µ
C8 0.22µ
C10 100µ
C15 10n
C7 10n
C9 10n
C4 10µ
C12 100µ
C14 0.22µ
C13 10n
C11 0.22µ
C5 0.1µ
C6 0.1µ
C2 4700µ
C3 4700µ
C16 10µ
240
220
115
100

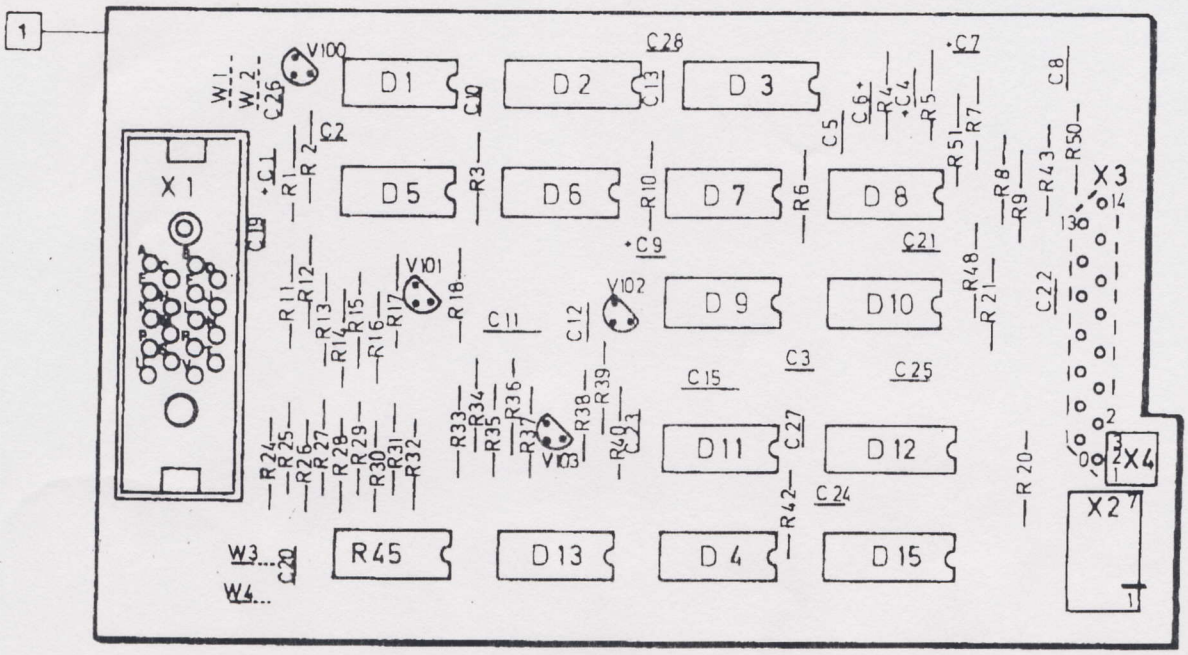

Component designation	Part No.	Description
1	1140 36 20-00/5	Circuit board compl.
D1	1063 65 15-50/3	IC SN74LS05
D2,3	1063 65 18-50/7	IC SN74LS221
D4	1596 11 00-00/3	IC SN74180
D5	1063 60 08-10/3	IC SN74LS00
D6	1063 64 56-50/0	IC SN74LS02
D7	1063 65 17-50/9	IC SN74LS74
D8	1063 65 16-50/1	IC SN74LS13
D9	1063 64 58-50/6	IC SN74LS08
D10	1063 60 12-10/5	IC SN74LS132
D11,13	1159 34 50-00/7	IC SN7404
D12,15	1063 64 76-50/8	IC SN74LS175
V100-103	1063 40 01-10/0	Trans BC238B
C1,5,8	1062 32 60-10/5	Cap 1µ 35V +50/-20%
C2,3,13,19, 22,24,26-28	1062 10 85-10/8	Cap 10n 50V +50/-20%
C4	1062 32 58-10/9	Cap 0.47µ 35V +50/-20%
C6	1062 32 56-10/3	Cap 0.22µ 35V +50/-20%
C7	1062 31 09-10/4	Cap 47µ 6,3V +50/-20%
C9	1062 32 64-10/7	Cap 4.7µ 35V +50/-20%
C10	1062 10 70-10/0	Cap 4.7n 63V 10%
C11	1062 22 04-10/4	Cap 3.3n 63V 20%
C12,23,25	1062 10 33-10/8	Cap 470p 63V 10%

Component designation	Part No.	Description
C15	1062 22 03-10/6	Cap 2.2n 63V 10%
C20,21	1062 10 37-10/9	Cap 1n 63V 10%
R1,12,14,34	1159 22 02-50/8	Res 1k 1/4W 5%
R2	1159 22 03-70/4	Res 10k 1/4W 5%
R3,4	1061 12 60-10/9	Res 21.5k 1/4W 1%

R5,9 To be tested out Res 14.7k - 100k 1/4W 1%

1061 12 52-10/6	14.7k	1061 12 76-10/5	46.4k
1061 12 56-10/7	17.8k	1061 12 80-10/7	56.2k
1061 12 60-10/9	21.5k	1061 12 84-10/9	68.1k
1061 12 65-10/8	27.4k	1061 12 56-10/7	82.5k
1061 12 69-10/0	33.2k	1061 12 92-10/2	100k
1061 12 72-10/4	38.3k		

Component designation	Part No.	Description
R6,20,21	1159 22 01-90/6	Res 330 1/4W 5%
R7,13,17,33, 37,40,42,43, 48,50,51	1159 22 03-30/8	Res 4.7k 1/4W 5%
R8	1061 12 72-10/4	Res 38.3k 1/4W 1%
R10	1159 22 02-30/0	Res 680 1/4W 5%
R11	1159 22 02-10/2	Res 470 1/4W 5%
R15,35,39	1159 22 03-20/9	Res 3.9k 1/4W 5%
R16,36	1159 22 04-70/2	Res 68k 1/4W 5%
R18,24-32	1159 22 00-90/8	Res 47 1/4W 5%
R38	1159 22 03-40/7	Res 5.6k 1/4W 5%
R45	1061 61 68-50/5	Res 13x2.2k 2%

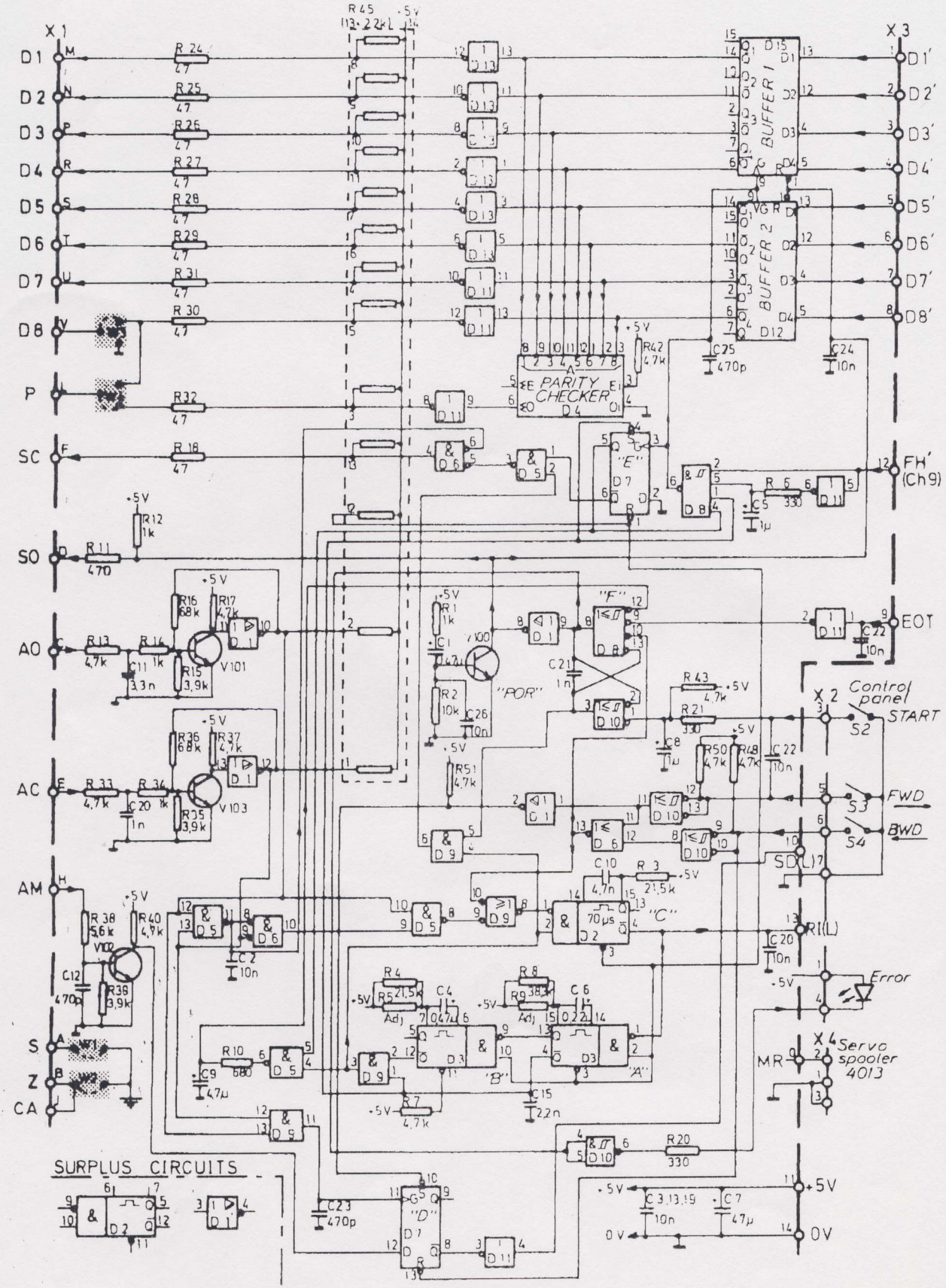
X 1
D1
D2
D3
D4
D5
D6
D7
D8
P
SC
SO
AO
AC
AM
S
Z
CA
R 45 22k
R 24 47
R 25 47
R 26 47
R 27 47
R 28 47
R 29 47
R 31 47
R 30 47
R 32 47
R 18 47
R 12 1k
R 11 470
R 13 4,7k
R 14 1k
C 11 3,3n
R 16 68k
R 17 4,7k
R 15 3,9k
V 101
R 33 4,7k
R 34 1k
C 20 1n
R 36 68k
R 37 4,7k
R 35 3,9k
V 103
R 38 5,6k
R 40 4,7k
V 102
C 12 470p
R 39 3,9k
C 2 10n
R 10 680
C 9 47µ
R 7 4,7k
C 23 470p
SURPLUS CIRCUITS
PARITY CHECKER
D 4
BUFFER 1
BUFFER 2
D 12
C 25 470p
C 24 10n
R 42 4,7k
"E"
D 7
C 5 1µ
R 6 330
FH'
(Ch9)
X 3
D1'
D2'
D3'
D4'
D5'
D6'
D7'
D8'
R 1 1k
C 1 47µ
V 100
"POR"
R 2 10k
C 26 10n
R 51 4,7k
"F"
C 21 1n
R 43 4,7k
R 21 330
C 8 1µ
R 50 4,7k
R 48 4,7k
C 22 10n
EOT
C 22 10n
X 2
Control panel
START
S2
S3
S4
FWD
BWD
SD(L)
RI(L)
C 10 4,7n
R 3 21,5k
70µs
"C"
C 20 10n
Error
R 4 21,5k
Adj
C 4 0,47µ
R 8 383
Adj
C 6 0,22
"B"
"A"
C 15 2,2n
R 20 330
"D"
C 3,13,19 10n
C 7 47µ
+5V
0V
X 4
MR
Servo spooler 4013

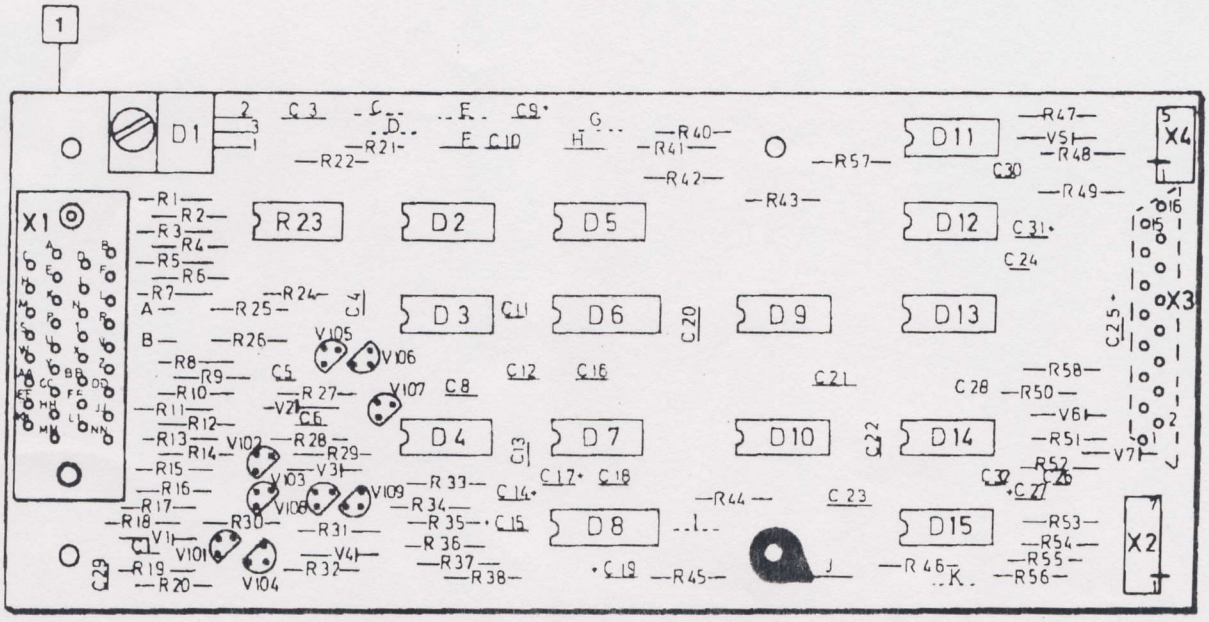

Component designation	Part No.	Description
1	1140 63 10-00/0	Circuit board compl.
D1	1063 60 15-10/8	IC SN7812
D2,3	1596 07 80-00/3	IC SN7407
D4	1063 65 16-50/1	IC SN74LS13
D5	1596 11 00-00/3	IC SN74180
D6,8	1063 65 18-50/7	IC SN74LS221
D7	1063 65 17-50/9	IC SN74LS74
D9	1063 64 65-50/1	IC SN74LS86
D10	1063 64 56-50/0	IC SN74LS02
D11	1063 65 15-50/3	IC SN74LS05
D12	1063 64 53-50/7	IC SN74LS08/ PNA1716CB
D13	1063 60 08-10/3	IC SN74LS00
D14	1063 64 57-50/8	IC SN74LS04
D15	1063 60 12-10/5	IC SN74LS132
V101,105, 107,108	1063 40 00-10/2	Trans BC214/BC308
V102,104, 106,109	1063 40 04-50/0	Trans BC184
V1-7	1159 19 10-00/2	Diode 1N4148
C1,5-7	8362 10 10-40/0	Cap 2.2n 63V 10%
C2,4,10,11, 13,22,24,26, 28,30,32	1062 10 85-10/8	Cap 10n 50V +50/-20%
C3	1062 22 13-10/5	Cap 0.1µ 63V 20%
C8,20	1062 10 37-10/9	Cap 1n 63V 10%
C9,17,19,31	1062 32 58-10/9	Cap 0.47µ 35V +50/-20%
C12,29	1062 10 70-10/0	Cap 4.7n 63V 10%
C14	1062 32 56-10/3	Cap 0.22µ 35V +50/-20%
C15	1062 32 64-10/7	Cap 4.7µ 35V +50/-20%
C16,18	1062 10 33-10/8	Cap 470p 63V 10%

Component designation	Part No.	Description
C21,23	1062 22 03-10/6	Cap 2.2n 63V 20%
C25	1062 31 09-10/4	Cap 47µ 6,3V +50/-20%
C27	1062 32 60-10/5	Cap 1µ 35V +50/-20%
R1-9,11,21, 25,26	1159 22 00-10/6	Res 10 1/4W 5%
R10	1159 22 02-50/8	Res 1k 1/4W 5%
R12,20,29, 32,38,40,41, 44,46	1159 22 03-30/8	Res 4.7k 1/4W 5%
R13,19,28,31	1159 22 01-70/8	Res 220 1/4W 5%
R14,16,18, 24,42,48,49, 58	1159 22 03-70/4	Res 10k 1/4W 5%
R15	1061 11 96-10/5	Res 1k 1/4W 1%
R17,27,36,37	1159 22 05-30/3	Res 220k 1/4W 1%
R22	1061 12 60-10/9	Res 21.5k 1/4W 5%
R23	1061 61 68-50/5	Res 13x2.2k 2%
R30	1061 11 80-10/9	Res 464 1/4W 1%
R33,55,57	1159 22 02-30/0	Res 680 1/4W 5%
R34	1061 12 48-10/4	Res 12.1k 1/4W 1%

R35,43 To be tested out Res 12.1k-100k 1/4W 1%

1061 12 48-10/4	12.1k	1061 12 72-10/4	38.3k
1061 12 52-10/6	14.7k	1061 12 76-10/5	46.4k
1061 12 56-10/7	17.8k	1061 12 80-10/7	56.2k
1061 12 60-10/9	21.5k	1061 12 84-10/9	68.1k
1961 12 65-10/8	27.4k	1061 12 88-10/0	82.5k
1061 12 69-10/0	33.2k	1061 12 92-10/2	100k

R45	1061 12 69-10/0	Res 33.2k 1/4W 1%
R47,53,54	1159 22 01-90/6	Res 330 1/4W 5%
R50,52	1159 22 03-10/0	Res 3.3k 1/4W 5%
R51,56	1159 22 02-90/4	Res 2.2k 1/4W 5%

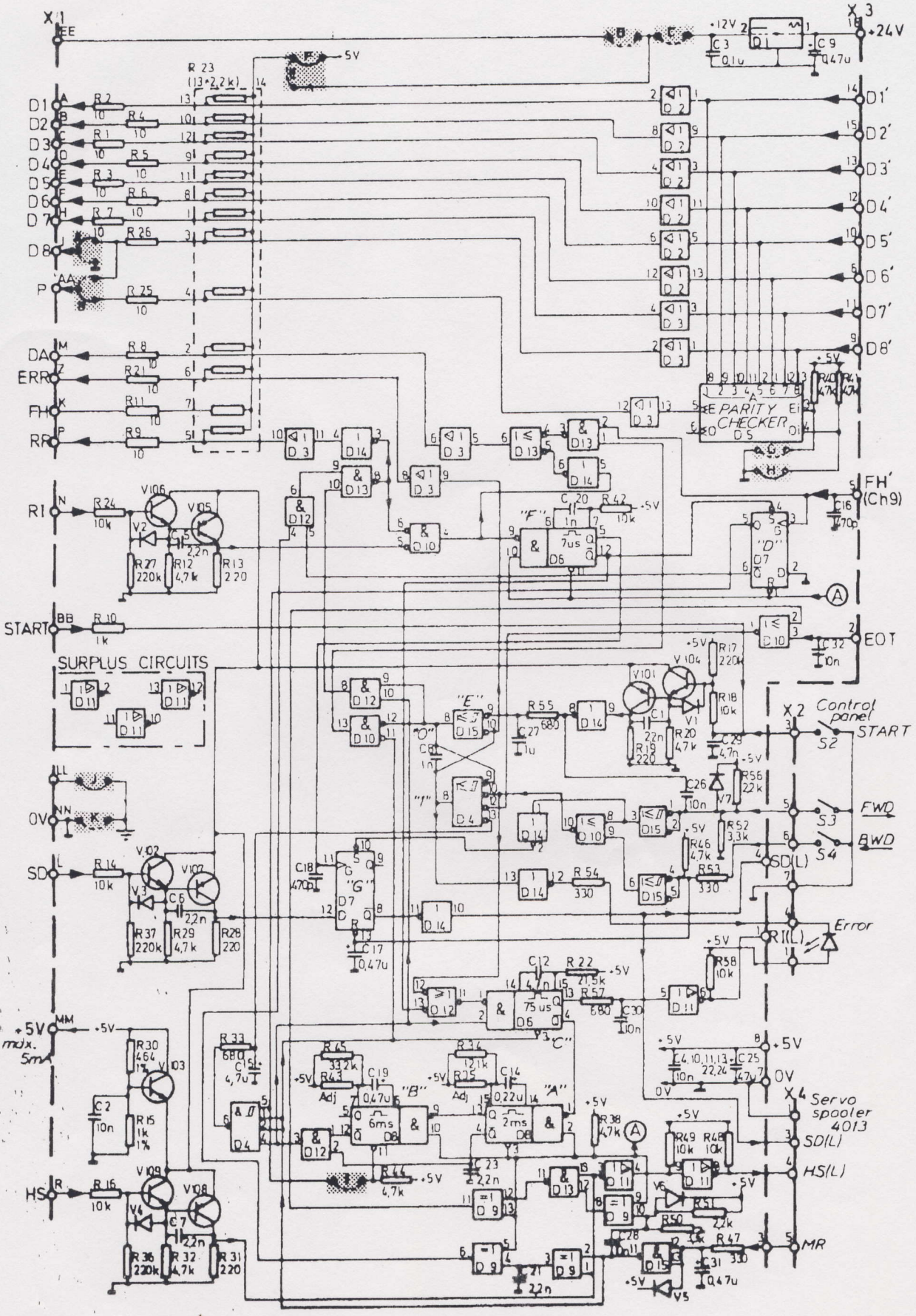
X1
X3
+24V
+12V
D1
D2
D3
D4
D5
D6
D7
D8
D1'
D2'
D3'
D4'
D5'
D6'
D7'
D8'
DA
ERR
FH
RR
RI
START
SD
HS
EOT
FH' (Ch9)
PARITY CHECKER
SURPLUS CIRCUITS
Control panel
START
FWD
BWD
Error
SD(L)
RI(L)
HS(L)
MR
Servo spooler 4013
+5V max. 5mA
0V

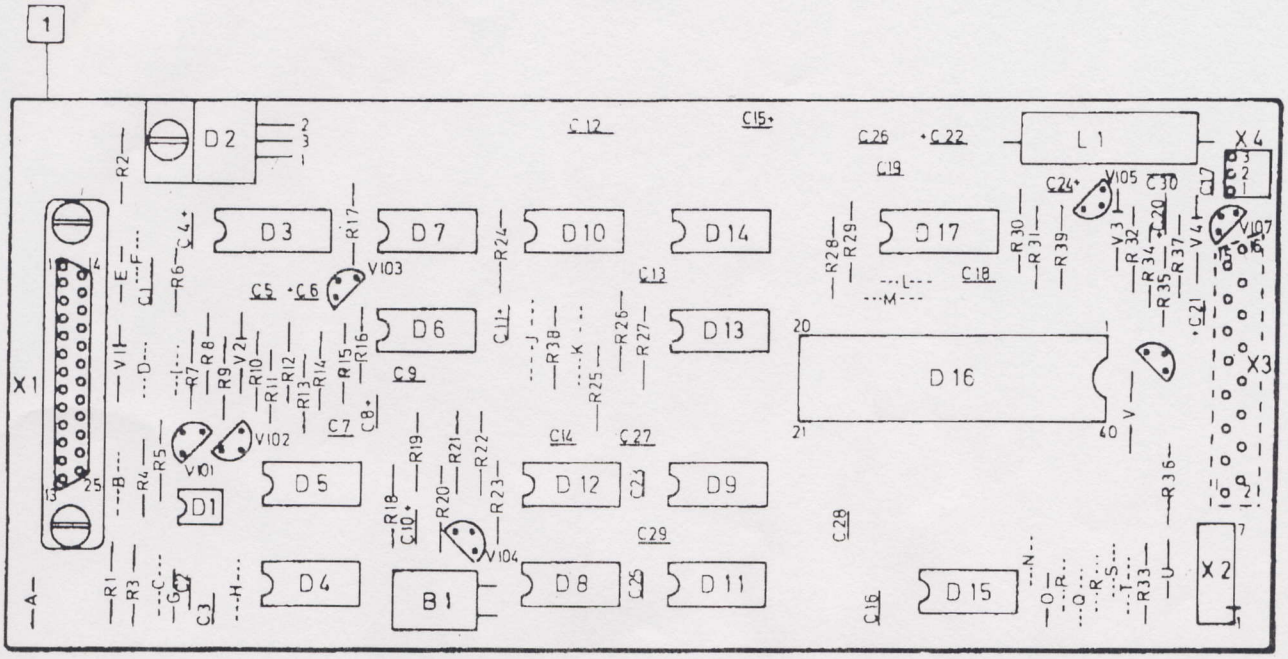

Component designation	Part No.	Description
1	1140 40 20-00/7	Circuit board compl.
D1	1069 30 09-50/7	IC 4N26
D2	1063 60 15-10/8	IC uA7812
D3,17	1063 65 18-50/7	IC SN74LS221
D4	1063 61 14-50/5	IC MC1489
D5	1063 60 65-50/9	IC MC1488
D6	1063 60 12-10/5	IC SN74LS132
D7	1063 65 16-50/1	IC SN74LS13
D8,11,15	1063 64 66-50/9	IC SN74LS93
D9	1063 64 59-50/4	IC SN74LS10
D10	1063 60 08-10/3	IC SN74LS00
D12	1063 64 57-50/8	IC SN74LS04
D13	8363 60 05-60/1	IC SN7433
D14	1063 64 58-50/6	IC SN74LS08
D16	1063 60 82-50/4	IC AY-5-1013
V101,103, 104,107	1063 40 01-10/0	Trans BC238B
V102,105,106	1063 40 13-10/5	Trans BC328
V1	1159 24 80-00/5	Diode 1N4448
V2	1063 20 35-10/0	Diode BZX79C5V1
V3	1063 10 03-10/9	Diode 1N4933
V4	1063 20 46-10/7	Diode BZX79C12
C1	1062 22 03-10/6	Cap 2.2n 63V 20%
C2,29	1062 10 33-10/8	Cap 470p 63V 10%
C3,5,7,13,17, 23,25,26,28, 30	1062 10 85-10/8	Cap 10n 40V +50/-20%
C4	1062 32 56-10/3	Cap 0.22µ 35V +50/-20%
C6,15	1062 32 58-10/9	Cap 0.47µ 35V +50/-20%
C8	1062 32 60-10/5	Cap 1µ 35V -50/-20%
C9,16,18	1062 10 37-10/9	Cap 1n 63V 10%
C10	1062 32 66-10/2	Cap 10µ 35V +50/-20%
C11,20	1062 32 64-10/7	Cap 4.7µ 35V +50/-20%
C12	1062 22 13-10/5	Cap 0.1µ 63V 20%
C14	8362 10 05-50/9	Cap 18p 63V 2%

Component designation	Part No.	Description
C19	1062 10 70-10/0	Cap 4.7n 63V 10%
C21,24	1062 31 09-10/4	Cap 47µ 6.3V +50/-20%
C22	1062 33 25-10/6	Cap 220µ 25V +100/-10%
C27	1062 10 27-10/0	Cap 100p 63V 10%
R1	1159 22 03-50/6	Res 6.8k 1/4W 5%
R2,11,14,16, 28,33,36,38	1159 22 03-30/8	Res 4.7k 1/4W 5%
R3,21,22	1159 22 01-60/9	Res 180 1/4W 5%
R4	1159 22 05-10/5	Res 150k 1/4W 5%
R5,17-19, 31,32	1159 22 03-70/4	Res 10k 1/4W 5%

R6,13 To be tested out Res 12.1k - 100k 1/4W 1%

1061 12 48-10/4	12.1k	1061 12 72-10/4	38.3k
1061 12 52-10/6	14.7k	1061 12 76-10/5	46.4k
1061 12 56-10/7	17.8k	1061 12 80-10/7	56.2k
1061 12 60-10/9	21.5k	1061 12 84-10/9	68.1k
1061 12 65-10/8	27.4k	1061 12 88-10/0	82.5k
1061 12 69-10/0	33.2k	1061 12 92-10/2	100k

R7	1159 22 02-90/4	Res 2.2k 1/4W 5%
R8	1061 12 48-10/4	Res 12.1k 1/4W 1%
R9	1159 22 01-70/8	Res 220 1/4W 5%
R10,35	1159 22 02-50/8	Res 1k 1/4W 5%
R12	1061 12 69-10/0	Res 33.2k 1/4W 1%
R15,27,29	1159 22 01-90/6	Res 330 1/4W 5%
R20,26	1159 22 02-80/5	Res 1.8k 1/4W 5%
R23	1159 22 02-70/6	Res 1.5k 1/4W 5%
R24	1159 22 02-30/0	Res 680 1/4W 5%
R25,37	1159 22 02-20/1	Res 560 1/4W 5%
R30	1061 12 60-10/9	Res 21.5k 1/4W 1%
R34	1159 22 04-00/9	Res 18k 1/4W 5%
R39	1061 10 95-10/9	Res 2.2 1/4W 5%
G1	1069 30 03-50/0	X-tal 4.915Mhz
L1	1064 10 11-10/0	Coil 1mH +/-10%

Circuit board 1140 35 30-00

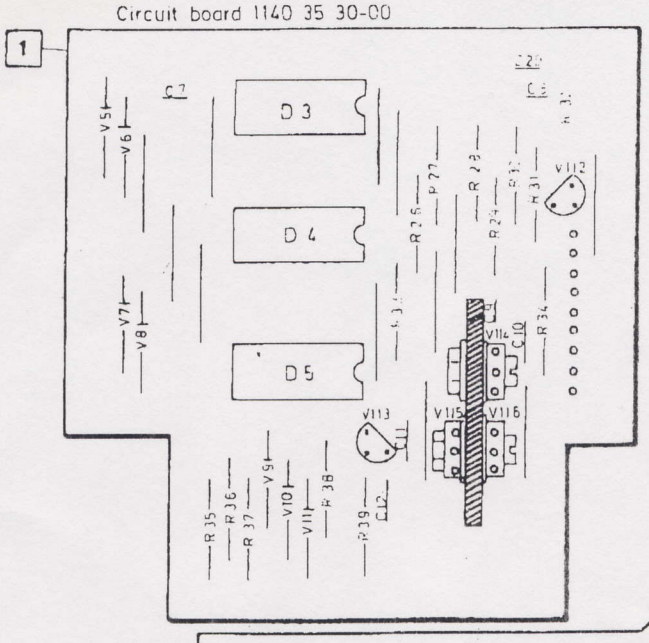

TAPE READER 4031

Circuit board 1140 35 50-00

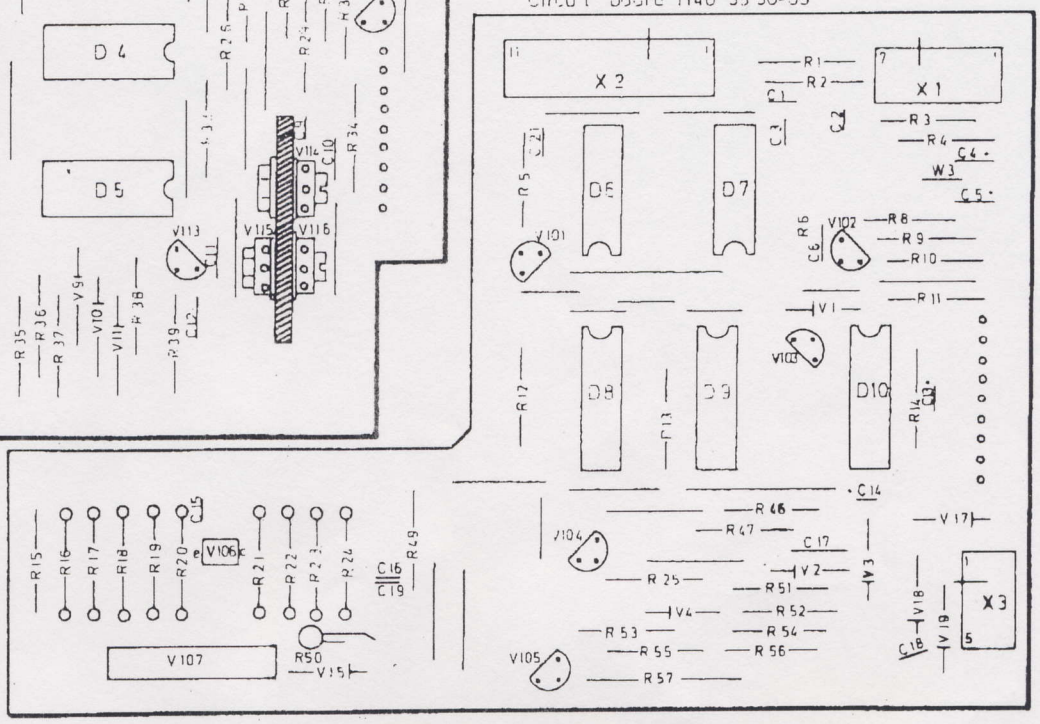

Component designation	Part No.	Description
1	1140 37 50-00/0	Reader circuit board assy. (1140 35 50-00 & 1140 36 50-00)
	1140 35 30-00/6	Motor circuit board
D3	1063 60 42-50/8	IC SN74107
D4	1596 03 80-00/2	IC SN7403
D5	1063 60 12-10/5	IC SN74LS132
D6,7	1063 60 11-10/7	IC SN74LS14
D8,9	1063 63 00-50/0	IC MM74C175
D10	1063 62 98-50/6	IC MM74C221
V101-104, 112,113	1063 40 01-10/0	Trans BC238B
V105	1063 40 10-10/1	Trans BC337
V106	1063 50 02-10/7	Phototransistor
V107	1063 50 01-10/9	Phototransistor array
V114-116	1063 40 04-30/2	Trans BD677A
V1,15	1159 24 80-00/5	Diode 1N4448
V2-11	1159 19 10-00/2	Diode 1N4148
V17-19	1063 10 03-10/9	Diode 1N4933
C1,2,3,15, 18,20	1062 10 85-10/8	Cap 10n 50V +50/-20%
C4	1062 32 66-10/2	Cap 10µ 35V +50/-20%
C5	1062 31 09-10/4	Cap 47µ 63V +50/-10%
C6,8,9,16,19	1062 10 70-10/0	Cap 4.7n 63V 10%
C7,10	1062 30 05-10/4	Cap 4.7µ 10V +50/-20%
C11,12	1062 10 37-10/9	Cap 1n 63V 10%
C13,14	1062 32 56-10/3	Cap 0.22µ 35V +50/-20%
C17	1062 22 09-10/3	Cap 22n 63V 20%
C21	1062 30 25-10/2	Cap 10µ 16V +50/-20%
R1,2	1159 22 01-40/1	Res 120 1/4W 5%
R3,4,8,11, 26,27,28,46	1159 22 03-30/8	Res 4.7k 1/4W 5%
R5,9,15	1159 22 02-50/8	Res 1k 1/4W 5%
R6,31,33	1159 22 04-10/8	Res 22k 1/4W 5%
R10	1061 12 76-10/5	Res 46.4k 1/4W 1%

Component designation	Part No.	Description

R12,16-24,51 To be tested out Res 1.78-100k 1/4W 1%

1061 12 08-10/8	1.78k	1061 12 52-10/6	14.7k
1061 12 08-10/0	2.15k	1061 12 53-10/4	15.4k
1061 12 16-10/1	2.61k	1061 12 54-10/2	16.2k
1061 12 20-10/3	3.16k	1061 12 55-10/9	16.9k
1061 12 24-10/5	3.83k	1061 12 56-10/7	17.8k
1061 12 28-10/6	4.64k	1061 12 60-10/9	21.5k
1061 12 33-10/6	5.9k	1061 12 65-10/8	27.4k
1061 12 36-10/9	6.81k	1061 12 69-10/0	33.2k
1061 12 40-10/1	8.25k	1061 12 72-10/4	38.3k
1061 12 44-10/3	10k	1061 12 76-10/5	46.4k
1061 12 48-10/4	12.1k	1061 12 80-10/7	56.7k
1061 12 49-10/2	12.7k	1061 12 84-10/9	68.1k
1061 12 50-10/0	13.3k	1061 12 88-10/0	82.5k
1061 12 51-10/8	14k	1061 12 92-10/2	100k

R14	1061 12 24-10/5	Res 3.83k 1/4W 1%
R13,25,29, 30,54	1159 22 03-70/4	Res 10k 1/4W 5%
R32	1159 22 04-50/4	Res 47k 1/4W 5%
R34	1061 11 60-50/7	Res 1.2 0.7W 10%
R35,36,37	1159 22 02-60/7	Res 1.2k 1/4W 5%

R38 To be tested out Res 120 - 680 1/4W 5%

1159 22 01-40/1	120	1159 22 01-90/6	330
1159 22 01-50/0	150	1159 22 02-00/3	390
1159 22 01-60/9	180	1159 22 02-10/2	470
1159 22 01-70/8	220	1159 22 02-20/1	560
1159 22 01-80/7	270	1159 22 02-30/0	680

R39	1159 22 01-30/2	Res 100 1/4W 5%
R47	1159 22 05-90/7	Res 680k 1/4W 5%
R49	1159 22 05-10/5	Res 150k 1/4W 5%
R50	1061 50 02-10/1	Res 470 NTC 10%
R52	1159 22 04-20/7	Res 27k 1/4W 5%
R53	1159 22 01-20/3	Res 82 1/4W 5%
R55	1159 22 00-60/1	Res 27 1/4W 5%
R56	1061 12 69-10/0	Res 33.2k 1/4W 1%
R57	1595 92 21-00/1	Res 470 4W 5%

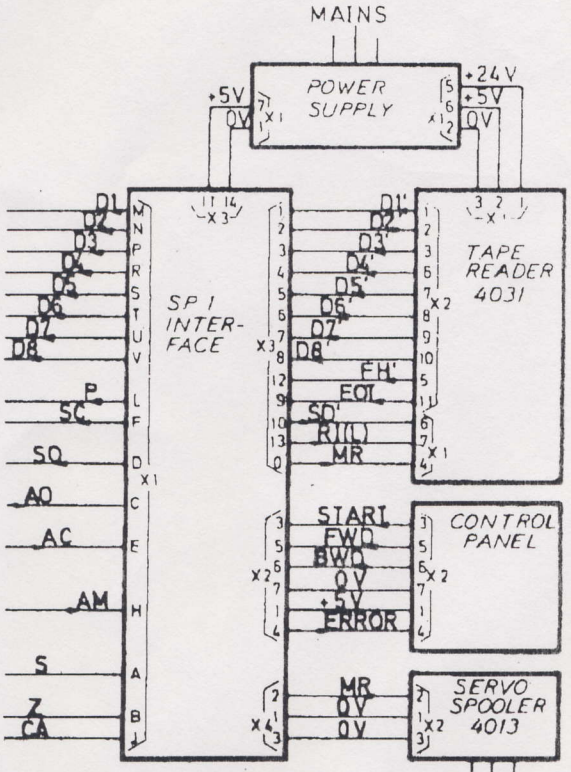

Interconnection: SP1 interface/4030

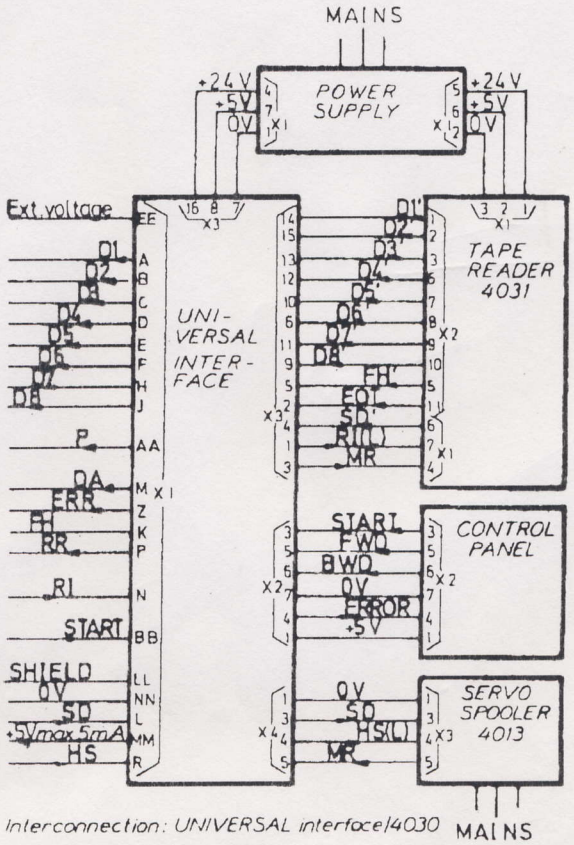

Interconnection: UNIVERSAL interface/4030

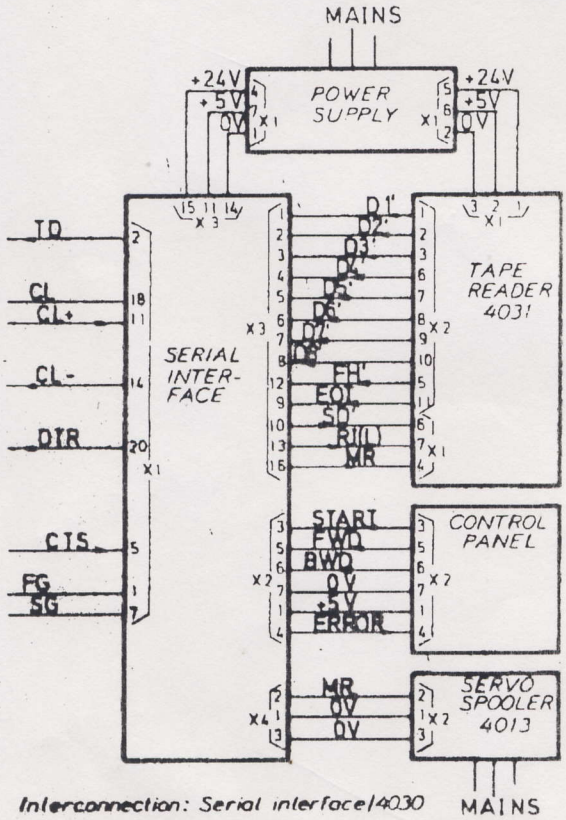

Interconnection: Serial interface/4030